GMP
Catalog

Periscope – Enhanced Dissolved Gases and Moisture in Insulating Oil Sensor

Monitoring the presence and evolution of gases dissolved in insulating oil of high voltage equipment such as power transformers and reactors, is an effective tool for diagnosis of its operation conditions. However, measurements of these gases in the laboratory, through tests of gas-chromatography in oil samples collected periodically for equipment, allowing a problem to start and evolve to a failure during the period between samples, usually several months. The Treetech's GMP Sensor come fill this gap by providing a real-time monitoring of hydrogen dissolved in insulating oil, since it is considered a key gas for the detection of defects in equipment immersed in oil. The GMP performs this measurement without cross interference from other gases such as carbon monoxide, in order to obtain maximum sensitivity in detecting defects without changes in hydrogen concentrations are obscured by constant and elevated CO.

The new sensor for gas and moisture Teletech's GMP presents the following innovative features:

- Compact size, saving space and reducing installation costs. More smart and economical;
- Can be installed in a valve with thread ½''. So there are more choices of locations for installation of the sensor.

- Therefore, it can be installed in places of higher oil circulation. For example, you can use pipes radiators, installing it in deaeration plugs. Is avoided in this way the oil that remains stagnant at the bottom of the tank;

The GMP performs the measurement of moisture and gases dissolved in insulating oil, displaying on the signs of:

- Hydrogen (H_2) dissolved in the oil and its trend of development, with prediction of time to alarms ;
- Percentage of water saturation (H_2O) in oil and associated oil temperature (*optional*);
- Water content (*ppm*) in the insulating oil at current temperature and at reference temperature, both calculated through water saturation (*optional*);
- Alarms by concentrations of H_2 and H_2O high or very high, and for trends of increased concentration of H_2 and H_2O (*if applicable*);

Features:

- Autonomous equipment. It has display and indicators (LEDs) to measurement and parameterization. The use of SDG's or IDG's HMI is optional;
- A RS-485 communication systems for monitoring or supervision systems;
- Open protocols Modbus RTU or DNP 3.0 Level 1 (*optional*) with support for 1ms resolution time-stamp;
- Robust design, exceeding the standards of EMC for operation in substations with severe electromagnetic conditions;
- Operating temperature -40 to 85 ºC, suitable for severe operating regimes and ambient conditions;
- Universal Power Supply, 38 to 275 Vdc or 85 to 265 Vac, 50/60 Hz;
- 4 programmable output relays;
- 2 current loop (mA) programmable outputs;
- Self-diagnosis of the conditions of the sensor;
- Protection Degree IP-65, withstanding severe conditions for field exposed to the weather.

Operating Principle:

Methodology for Online Monitoring of the Gas Dissolved in Oil:

The sensors used by the Periscope to measure the gas concentrations and the moisture use semiconductor technology, which allows the elimination of cross-sensitivity to other combustible gases.

Representativeness of the measurement:

For the process described above to measure dissolved hydrogen to be effective for the diagnosis of the equipment, the oil must be in contact with the GMP sensor (and consequently the hydrogen dissolved in it) represents the general status of the transformer. The natural circulation of the oil inside the tank due to the convection currents contributes for this condition to be true, and the convection currents are caused by the differences of temperature between the heat sources inside the equipment and the heat dissipation points, such as radiators and lateral walls.
For this reason, ideally the gas monitor must be installed in a place where the oil circulates a lot for instance, one of the side walls of the transformer or the entrance/exit radiator piping.

Technical Specifications

Conditions	Interval / Description
Supply Voltage:	38 to 275 Vcc or 85 to 265 Vca, 50/60 Hz;
Consumption:	≤8 W
Degree of Protection:	IP 65 (*NEMA 4*)
Connections - Taking crimp:	0,3 to 2,5 mm² (*22 to 16 AWG*)
Connection to the insulating oil:	Connection ½'' BSP (Adapter Supplied for ½'' NPT) (Recommended to use ball valve or drawer)
Operating Temperature - Environment:	-40 to +85 ºC
Oil Operating Temperature:	-10 to +90 ºC
Oil Pressure:	0,15 MPa (*1,5 bar*) / Full Vacuum
Relay outputs:	Dry Contacts
Types and functions (standard)	3 NO / 1 NC - with common point
Maximum switching power:	70 W (cc) / 220 VA (ca) non inductive
Maximum switching voltage:	250 Vcc / 250 Vca
Maximum current drive:	1 A, The current sum of the four relays shall not exceed 2 A in common point (Point 5)
Serial Communication Ports:	1 RS-485
Communication protocols:	Modbus-RTU, DNP 3.0 (*Optional*)
Analog outputs:	2 outputs with common positive
Maximum error:	0,5% of full scale
Options (selectable) and maximum load:	0...1 mA, 10 kΩ 0...5 mA, 2 kΩ 0...10 mA, 1 kΩ 0...20 mA, 500Ω 4...20 mA, 500Ω
Measurement of hydrogen:	
Measuring range:	0 a 2000 ppm
Maximum error:	± 5% of measure or ± 20 ppm (whichever is higher)
Measurement of Percentage Saturation of Water (*optional*)	
Measuring range:	0 to 100% water saturation
Maximum error:	± 2% of water saturation
Temperature measurement:	One (oil in the sensor module)
Measuring range:	-55 to 200ºC
Maximum error at 20ºC:	0,5% of full scale

Mass memory:	Nonvolatile FIFO (First In First Out)
Recording interval:	1 to 1440 minutes
Capacity:	55.000 Records - 6,2 years with an interval of 60 minutes
	55.000 Records - 37,6 years with an interval of 6 hours
	55.000 Records - 50,2 years with an interval of 8 hours

Connection Diagram

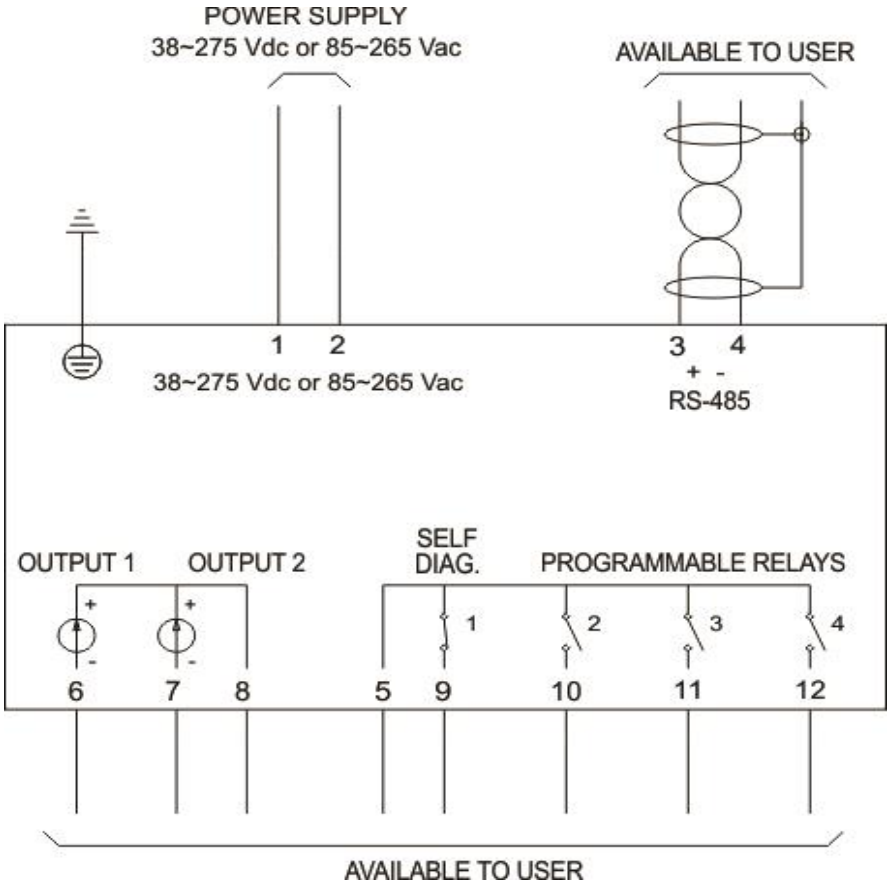

Dimensions

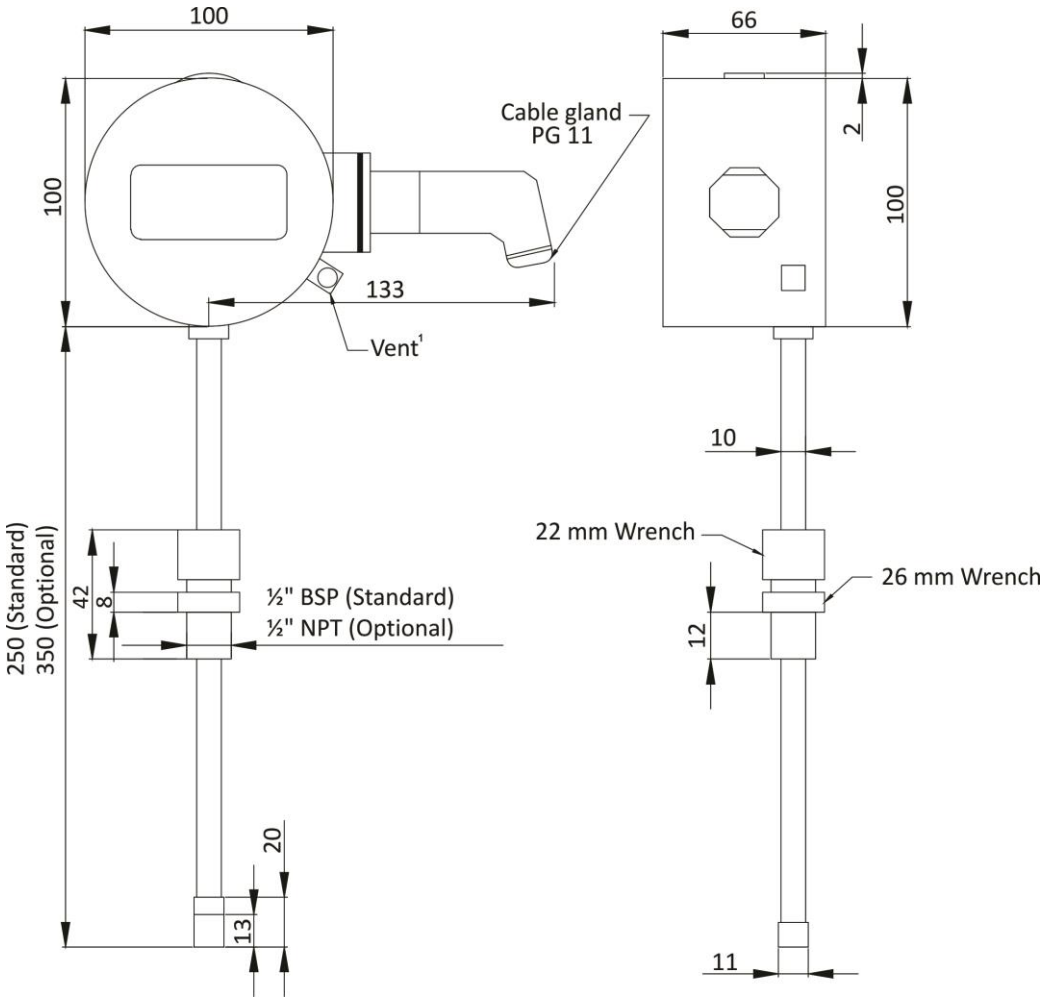

BSP to NTP adapter (Optional):

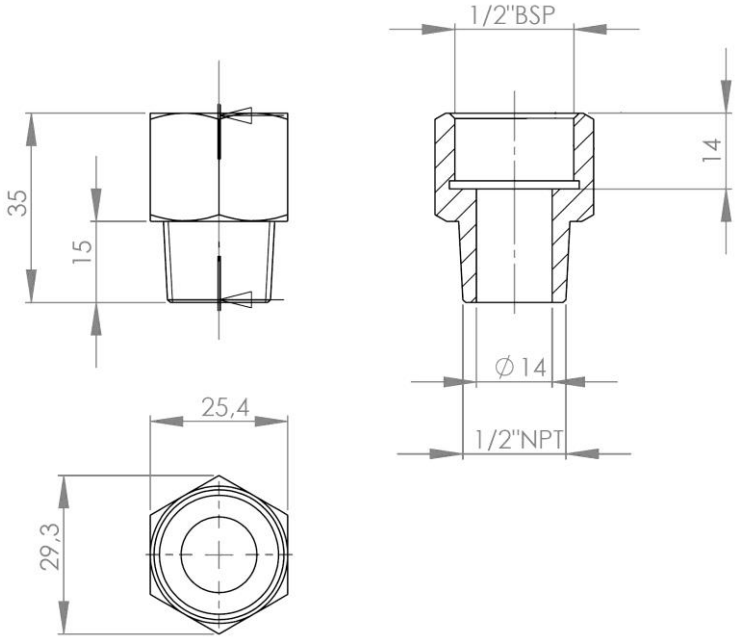

Order Especification

Periscope GMP – Specialist Gases and Moisture Dissolved in the Isolating Oil Sensor is an universal equipment. The operating characteristics are selected by way of program menus through frontal display or for the communication ports. The supply entrance is universal (38 the 265 Vdc / Vac 50 / 60 Hz). Therefore, in ordering the device all that needs to be specified is:

- Quantity requested;
- Standard thread connection: ½ "BSP (Standard) or ½" NPT (Supplied adapter);
- The shaft length: 250 mm (Standard) or 350 mm (Optional);
- Optional: Alarm concentration of H_2O.

Type Testing

Surge Immunity (IEC 60255-22-5/02 / IEC 61000-4-5):

Phase-neutral surges:	1kV, 5 per polarity (+/-)
Phase-ground and neutral-ground surges:	2kV, 5 per polarity (+/-)
Immunity Against Conducted Disturbance Induced by RF Field (IEC 60255-22-6/01 / IEC 61000-4-6):	
Frequency:	150 kHz - 80 MHz
Field intensity:	10 V/m
Electrical transients Immunity (IEC 60255-22-1/88 / IEEE C37-90-1 / IEC 61000-4-1):	
1st cycle peak	2,5 kV
Frequency:	1,1 MHz
Time and repetition rate:	2 seconds, 400 surges/sec.
Decay to 50%:	5 cycles
Voltage Impulse (IEC 60255-5/00):	
Wave form:	1,2/50 µs
Amplitude and energy:	5 kV; 0,5J
Number of pulses:	3 negative and 3 positive, 5s interval
Insulation Voltage (IEC 60255-5/00 / NBR 71116):	30 A/m, 3 orthogonal axes
Industrial frequency insulation voltage:	2 kV 60Hz 1 min. To ground
Irradiated electromagnetic field Immunity (IEC 60255-22-3/00 / IEC 61000-4-3):	
Frequency:	80 MHz a 2 GHz
Field intensity:	10 V/m
Electrostatic Discharge (IEC 60255-22-2/96 / IEEE C37.90.3 / IEC 61000-4-2):	
Air mode:	8 kV, tem discharges per polarity

Contact mode:	6 kV, tem discharges per polarity
Fast electrical transient immunity (IEC 60255-22-4/02 / IEC 61000-4-4 / IEC 801-4 / IEEE C37-90-1):	
Power supply, inputs and outputs:	4 kV
Serial communication port:	2 kV
Cold Supportability (IEC 60068-2-1):	
Dry heat (IEC 60068-2-2):	
Damp Heat (IEC 60068-2-78 / IEC 60068-2-3):	
Climatic test: (IEC 60068-2-14):	
Temperature range:	-40 a +85ºC
Total test time:	96 hours
Vibration response: (IEC 60255-21-1):	
Application mode:	3 axes (X, Y e Z), sinusoidal
Frequency:	0,075mm from 10 to 58 Hz
Amplitude:	1G from 58 to 150 Hz
Duration:	8 min/axis
Vibration resistance: (IEC 60255-21-1):	
Application mode:	3 axis (X, Y e Z), sinusoidal
Frequency:	10 to 150 Hz
Amplitude:	2G
Duration:	160 min/axis

BRAZIL
Treetech Sistemas Digitais Ltda
Praça Claudino Alves, 141, Centro
CEP 12.940-000 - Atibaia/SP
+ 55 11 2410-1190
comercial@treetech.com.br
www.treetech.com.br