English

www.treetech.com.br

TECHNICAL MANUAL

GMP

Gas and Moisture Monitor Periscope

Treetech

Praça Claudino Alves, 141 - Atibaia - SP - Brasil CEP: 12940-800 - Tel./Fax: 55 11 4413-5787

Table of Contents

Figure List

Table List

1 Foreword

1.1 Legal Information

The information contained herein is subject to change without notice.

Treetech Digitals Systems Ltd may have patents or other kind of records and intellectual property rights connected to the content of this document.

The possession of this document by any person or entity does not entitle them to claim having any rights over those patents or records.

1.2 Introduction

This manual contains all recommendations and instructions to install, operate and service the Periscope Gas and Moisture Monitor (GMP).

1.3 Typographical conventions

The following conventions have been adopted for this text:

In Bold: Symbols, terms and words in bold type are more significant in the context. Therefore, special attention must be given to these symbols, words or terms.

In Italics: Words in a foreign language, alternative or used outside their formal situation are in italics.

1.4 General information and Safety

This section introduces relevant aspects concerning safety, installation and maintenance of the Periscope.

1.4.1 Safety Symbols

This manual uses three types of risk classification, as follows:

Attention

The **Attention** symbol is used to inform the user to the fact that an operating or maintenance procedure is potentially dangerous, demanding more attention while being performed. People can get slightly or moderately injured, and damage to the equipment may occur.

Warning

The **Warning** symbol is used to warn the user against a potentially dangerous operating or maintenance procedure, where extreme care must be exercised. Serious injuries or death may happen. Possible irreversible damage to the equipment may occur.

Electric Shock Risk

The **Electric Shock Risk symbol** is to alert the user against an operating or maintenance procedure that, if not strictly followed, may cause electric shock. Slight, moderate, severe injuries may happen or death may occur.

1.4.2 General symbols

This manual uses the following symbols for general purposes:

Important

The **important** symbol is used to stress relevant information.

Tip

The symbol **Tip** represents instructions which make the use or access to functions of the Periscope easier.

1.4.3 Minimum recommended profile of the person operating and maintaining the Periscope

The installation, maintenance and operation of this equipment in electric power substations demand special care, and therefore all the recommendations in this manual, as well as applicable standards, safety procedures, safe work practices and good sense must be exercised while handling the Periscope Moisture and Gas Monitor (GMP).

For the purpose of using this manual, an authorized and trained person knows the inherent risks - electric as well as environmental - connected to handling this Periscope.

Only authorized and trained people – operation and maintenance personnel – should handle this equipment.

a) The operation or maintenance worker must be trained and authorized to operate, ground, turn the Periscope on or shut it down, following the maintenance procedures according to the established safety practices, under complete responsibility of the operation or maintenance personnel in charge of the Periscope;
b) Must have first aid training;
c) Must have training in the working principles of the Periscope, as well as on its configuration.
d) Must follow the normative recommendations as to interventions in any kinds of equipment inserted in an Electric Power System.

1.4.4 Environmental and voltage conditions required for installation and operation

The following program lists important information about the environmental and voltage requirements:

Condition	Interval / Description
Application	Equipment to be used outdoors, in substations, industrial and similar environment.
For indoor/ outdoor use	Outdoor use only
Protection Grade (IEC 60529)	IP 66 (NEMA 4)
Altitude* (IEC EN 61010-1)	Up to 2000 m
Temperature (IEC EN 61010-1)	
Operation	-40 °C to + 85 °C
Process	-10 °C to + 90 °C
Storage	-50 °C to +95 °C
Relative humidity (IEC EN 61010-1)	
Operation	0% to 100% – Condensed or Not
Storage	0% to 100% – Condensed or Not
Source Voltage Fluctuation (IEC EN 61010-1)	Up to ±10% of the Nominal Voltage
Overvoltage (IEC EN 61010-1)	Category II
Pollution Level (IEC EN 61010-1)	Rank 3
Atmospheric pressure** (IEC EN 61010-1)	80 kPa to 110 kPa

* Application has been successful for altitudes over 2000 m.
** Application has been successful for pressures under 80 kPa.

1.4.5 Test and Installation Instructions

This manual should be made available for the ones in charge of the installation and maintenance, as well as for the users of the Periscope Gas and Moisture Monitor (GMP).

In order to ensure users' safety, protect equipment and for the operation to be smooth, the following minimum procedures must be followed during installation and maintenance of the Periscope:

1. Read this whole manual carefully before installing, operating or servicing the Periscope. Periscope installation, maintenance or adjustment errors may cause malfunction in the product, unsatisfactory measurements, wrong alarms or absence of pertinent alarms.
2. Periscope installation, adjustments and operation must be done by trained personnel who are well acquainted with power transformers, control devices and command devices for substation equipment.
3. Special attention should be paid to the Periscope installation (chapter 3 - Project and installation), including the kind and gauge of the cables and terminals used, as well as the procedures for correct parameterization of the equipment (chapter 5 - Parameter Programming) and start-up procedures to (Chapter 6 – Start-up Procedure).

The Periscope can be installed outdoors (exposed to the weather), as long as the temperature does not exceed the one which has been specified for the equipment.

Try to install the Periscope in spots where lower temperatures predominate, avoiding heat sources like ventilation outlets or wherever the equipment might be in the way of hot air, like the outlet of cooling equipment or forced ventilation ducts.

1.4.6 Cleaning and Decontamination Instructions

Clean the Periscope carefully. Use ONLY a piece of cloth moistened with soap or detergent diluted in water to clean outside the case, front panel or any other part of the equipment. Do not use abrasive cleaners, polishing materials or aggressive chemicals (like alcohol or ketone) on any of the surfaces.

Turn off and disconnect the equipment before cleaning any part of it.

1.4.7 Inspection and Maintenance Instructions

The following recommendations must be followed to inspect and service the Periscope:

Do not try to open the equipment because this may cause irreversible mechanical damage. No parts of it can be repaired by the user. Only Treetech's Technical Support or a technician recommended by Treetech should do it
This equipment is completely maintenance-free, and periodic and operating inspections, either visual or not, can be done by the user. These inspections are not mandatory.

Do not try to access the Factory Menu (FACT). An attempt to access this menu with a wrong password will make the Periscope show the message VOID on the display for some seconds. The time during which this message is shown will increase as more attempts to access the menu are made with the wrong password.
After 5 attempts with the incorrect password, the Periscope will completely block the access to the Factory Menu and the VOID message will be permanently shown on the display. Although the equipment is not affected and continues to work, this user will lose his warranty.

If the Periscope is opened at any time, the warranty will be voided. If the equipment is opened Treetech will not be able to guarantee that it will function correctly, regardless of the warranty being expired or not.

All Periscope parts must be supplied by Treetech, or by one of its accredited suppliers, according to Treetech's specifications. If the user wants to buy them any other way, he must strictly follow Treetech's specifications to do it. Then the performance and safety for the user and the equipment will not be compromised. If these specifications are not followed, the user and the equipment can be exposed to unforeseen risks.

1.5 Technical Support

In order to obtain technical support for the Periscope or any other Treetech product, contact us at the address below:

Treetech Digitals Systems Ltda. – Technical Support
Rua José Alvim, 100 – Salas 03 e 04 – Centro
Atibaia – São Paulo – Brasil
CEP (Zip Code) 12.940-800
CNPJ (corporate taxpayer ID): 74.211.970/0002-53
IE: 190.159.742.110
Phone: 011 + 55 (11) 2410-1190 x201
FAX: 011 + 55 (11) 2410-1190 x702

1.6 Warranty

The Specialist Gas and Moisture Sensor - Periscope shall be covered by a warranty issued by Treetech for 2(two) years, from the date it is purchased on, solely against eventual manufacturing defects or quality flaws that make him inadequate for regular use.

The warranty will not cover damage undergone by the product due to accidents, maltreating, mishandling, incorrect installation or application, inadequate tests, tampering or broken warranty seal.

The Periscope warranty will be voided if 5 (five) attempts are made to access the factory menu (FACT) with a wrong password. In that case, the Periscope will completely block the access to that menu and the message VOID will permanently be shown in its display. In the 4 (four) first attempts the user will be warned against a violation attempt by the temporary VOID message on the display.

If any technical support is needed Treetech or its authorized representative must be contacted, and the equipment must be sent over there with the respective purchase order.

Treetech does not provide any other warranty, either overt or implied, apart from the aforementioned one. Treetech does not provide any guarantee of adequacy of the Periscope to a particular application.

The supplier cannot be blamed for any damage to property or for losses and damages that arise, are connected to, or result from purchasing this equipment, from its performance or any other service possibly supplied with the Periscope.

Under no circumstances the supplier will be deemed accountable for damages and losses including but not limited to loss of profit, impossibility of using the Periscope or any associated equipment, capital costs, acquired energy costs, equipment costs, installation costs, or replacement services, stoppage costs, client complaints or client workers, and it does not matter if the damages, complaints or losses are based on contract, negligence warranty, tort or any other. Under no circumstances the supplier will be deemed accountable for any personal damage whatsoever.

1.7 Revision History

Revision	Date	Description	Prepared by
1.00	12/10/2010	*Initially issued*	Marcos Alves Daniel Carrijo
1.01	19/08/2014	*General review, separation of manual and protocol documents*	Daniel Pedrosa
1.02	02/09/2014	*General review for firmware version 1.15*	Daniel Pedrosa
1.03	12/09/2014	*Revised parameters MODE, ADDR, ADR1 and ADR2 for firmware version 1.15*	M. Alves
1.04	05/01/2015	*Revised missing text at appendix B about power supply values*	Daniel Pedrosa
1.05	06/03/2015	*Revised text and menus for firmware version 1.16*	Rodrigo Gennari
1.06	19/05/2015	*Revised International Representatives and Treetech logos*	João Victor Miranda

2 Introduction

Insulating oils are applied in high and extra-high voltage equipments as dielectric media, due to the great potential differences they undergo, and as a heat conduction element, increasing the efficiency of cooling systems. Oftentimes other solid insulating cellulose-based materials are used, such as paper, cardboard and wood, together with the insulating oil. Some of the most common application examples are the power transformers, shunt reactors and current transformers.

Since those equipments play essential roles in electric power systems, eventual failures may cause great losses, not only due to the damage in equipment, but also due to loss of income, contract fines and reduction of the reliability on the power system. In this context, monitoring the gases dissolved in the oil is crucial for diagnosing the status of the equipments, and often this detects incipient failures, and also indicates their possible causes. With that, worse damage to the equipment or even its total loss can be prevented.

Abnormal conditions of operation, such as hot spots, partial discharges or electric arcs, cause insulating oil/cellulose decomposition, forming combustible gases which remain dissolved in the oil. The formed gases and their concentration depend on the temperature and failure energy and of the materials involved, including H_2, CO, CO_2 and low molecular weight hydrocarbons such as C_2H_6, C_2H_4 and C_2H_2. As the hydrogen (H_2) is formed by decomposition of the oil at all failure temperatures, its increased concentration is accepted as a universal indicator of the presence of equipment failure.

Treetech's GMP monitor, therefore, monitors the hydrogen dissolved in insulating oil online, since hydrogen is deemed to be a key element to detect defects in oil-immersed equipment. The GMP carries out the measurement without cross-interference from others gases, such as carbon monoxide, so that it obtains maximum sensitivity in failure detection, without which the changes in hydrogen would be covered up by constant high concentrations of other gases.

Alternatively, GMP can also monitor moisture in oil and other combustible gases (upon request).

2.1 Main Features

The Periscope Gas and Moisture Monitor (GMP) has several innovative features, as listed below:

- Compact dimensions, saving space and reducing installation costs. More cost-effective;
- Installation in a valve or small thread up to ½'', thus providing more options of places for sensor installation;
- Consequently, it can be installed in places where oil circulation is more intense; For instance, the radiator piping can be used, and the Periscope can be installed on the air purging or oil draining tanks. This is a way to prevent stagnated oil from accumulating at the bottom of the tank whenever the transformer's draining valve is used;
- It measures the hydrogen dissolved in the oil, and its evolution trend, predicting times, in days, to reach the high level and Very High level alarms;
- Alarms that indicate high and Very High hydrogen concentration and also H_2 concentration trends;
- Stand-alone equipment, with a local LED display to show measurements, alarms and parameterization. Optional use of SDG or IDG IHMs;
- RS-485 communication port with monitoring or supervision systems;
- Open communication protocols - standard RTU Modbus or DNP3.0;
- Rugged design, exceeding EMD standards, for operation in the harsh substation electromagnetic conditions. Operating temperature of -40 to 85 ºC;
- 38 to 275 Vdc or 85 to 265 Vac 50/60 Hz Universal power supply voltage;
- Four output programmable relays;

- Two programmable current loop outputs (mA);
- IP-66 protection rating, withstanding adverse installation conditions exposed to the weather.
- Self-diagnosis to detect internal failure or power supply failure.

The GMP can also have the following optional features:

- Water in oil saturation percentage as well as the associated oil temperature measurement;
- Water in oil content in PPM;
- Alarms for high or too high water content and for water content elevation trend;

Figure 1: Specialist Periscope Gas and Moisture Sensor (GMP)

2.2 Basic Operation Philosophy

2.2.1 Periodic analysis of dissolved gases

The analysis of dissolved gases in oil (DGA - Dissolved Gas Analysis) has been used and recognized around the world as an efficient tool for the analysis and diagnostics or incipient failure in oil-immersed transformers and high-voltage equipment. It has also been widely used by transformer manufacturers as a tool to assess their product performance and by users of these equipment in preventive maintenance programs.

In spite of this success, the DGA is, most times, a lab method based on a manual oil sample collection program, periodically carried out on the equipment, and this sampling frequency is defined as a function of the relative significance of the equipment and eventual suspected defects. With that, a fast evolution gas failure might not be detected in a first sampling and become excessively worse until it is detected in the following sampling, or, in the worst scenario, lead to equipment failure before the next analysis is done.

In addition to the main inconvenience we explained above, the periodic DGA still has the error risk due to flawed sample collection processes and transportation of the sample to the lab, and wrong operation of the analysing equipment; it requires, therefore, specialized workers.

2.2.2 Online Monitoring of Gases Dissolved in Oil

DGA in oil is, as aforementioned, a tool of indisputable significance for the status diagnosis of equipment immersed in insulating oil, and if constantly done it increase this tool even more, eliminating the listed inconveniences. Obviously this online monitoring through collecting oil samples is not feasible in practice, and also not convenient under the economic point of view, whenever it is necessary to supervise dozens or hundreds of devices.

On the other hand, in most applications, it is not yet feasible from the financial point of view to install equipment that does online measurement of all combustible gases in the oil, as done in a laboratory with the periodic samples. This fact might lead us to believe online monitoring of gases dissolved in oil is not feasible, but this is not true.

Papers by several researchers have proved that hydrogen is present either by itself or with other gases, in all oil decomposition processes, and this makes it a "universal failure indicator". Once this key gas evolution is continuously monitored, it is possible to detect an eventual problem developing in the equipment at any time, although this measurement does not allow pinpointing what exactly is going on.

Once a problem in the equipment is detected from the increase in H_2level, it can be confirmed (or not) and investigated through lab tests carried out with oil samples.

This is a way to eliminate the time interval in which the equipment is without supervision, and the incipient failure identification in time allows the user to plan the necessary steps to identify it and do whatever is needed to correct it when it is the case.

2.2.3 Methodology for Online Monitoring of the Gas Dissolved in Oil

The online monitoring of the hydrogen dissolved in oil as the key to detect oil-immersed equipment failure closes the gap in the periodic DGA method.

Treetech's GMP measures the H_2 concentration in oil, so that the evolution of this gas is continually measured, and any increases that indicate the existence of a possible failure in the high voltage equipment are continually monitored.

2.2.3.1 Hydrogen Concentration Measurement

The sensors used by the Periscope to measure the gas concentrations and the moisture use semiconductor technology, which allows the elimination of cross-sensitivity to other combustible gases. Once energized, the Periscope starts up the gas sensors for one hour before effectively starting this measurement.

Given that the phenomena of generation and dispersion of the gases in the high voltage equipment has long time constants, GMP's response to alterations in the hydrogen concentration in oil has a time constant of approximately 8h.

2.2.3.2 Representativeness of the measurement

For the process described above to measure dissolved hydrogen to be effective for the diagnosis of the equipment, the oil must be in contact with the GMP sensor (and consequently the hydrogen dissolved in it) represents the general status of the transformer.

The natural circulation of the oil inside the tank due to the convection currents contributes for this condition to be true, and the convection currents are caused by the differences of temperature between the heat sources inside the equipment and the heat dissipation points, such as radiators and lateral walls.

For this reason, ideally the gas monitor must be installed in a place where the oil circulates a lot for instance, one of the side walls of the transformer or the entrance/exit radiator piping.

3 Project and Installation

3.1 System Topology

Due to being a standalone device, the gas monitoring system of the GMP is made of just a few modules, which are easily installed:

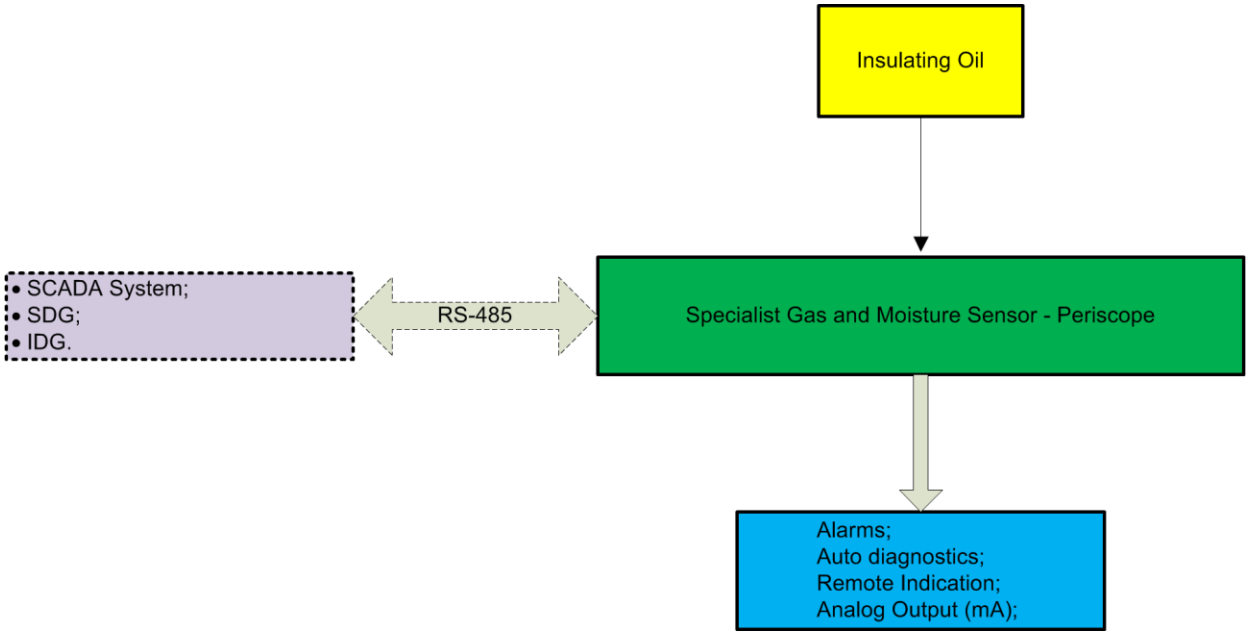

Figure 2: Composition of the Gas and Moisture Monitoring System

The items that are necessary to install the system are:

- Periscope Gas sensor;
- Auxiliary power cables and alarm contacts (if used);
- Cable with two shield twisted pairs for mA outputs (if used);
- Shield twisted pair cable for RS-485 serial communication (if used);
- Free passage valve (either ball or gate) or the GMP to access the insulating oil.

Optional parts for the system:

- IDG or SDG Interface Module used if the GMP is installed in a place difficult to be accessed, making it hard to read the measurements in your local display, or to increase the output or communication interfaces.

3.2 Mechanical installation

The Periscope Gas and Moisture Sensor (GMP) must be installed in a place with good oil circulation, such as the radiator piping or heat exchangers, in a valve of at least ½ in. diameter with free passage, of the ball or gate type, so as to allow insertion of the GMP's rod through the valve, placing the tip of the rod on a place where there is oil circulation. Thus the measurement of the gas in oil stagnated inside the valve is prevented. This is why valves that do not allow free passage, like the "globe" ones, should not be used.

GMP has a 250 mm rod for connection to the process as shown in Figure 3. The free length of the rod for the insertion of the GMP up to the oil flow is of approximately 200 mm. So the full distance from the tip of the valve up to the inside of the piping or the tank must be below 200 mm, as illustrated in Figure 4, and this guarantees that the tip of the rod be inserted into the oil flow.

The GPM working limits, of -40 to +85, should also be complied with.

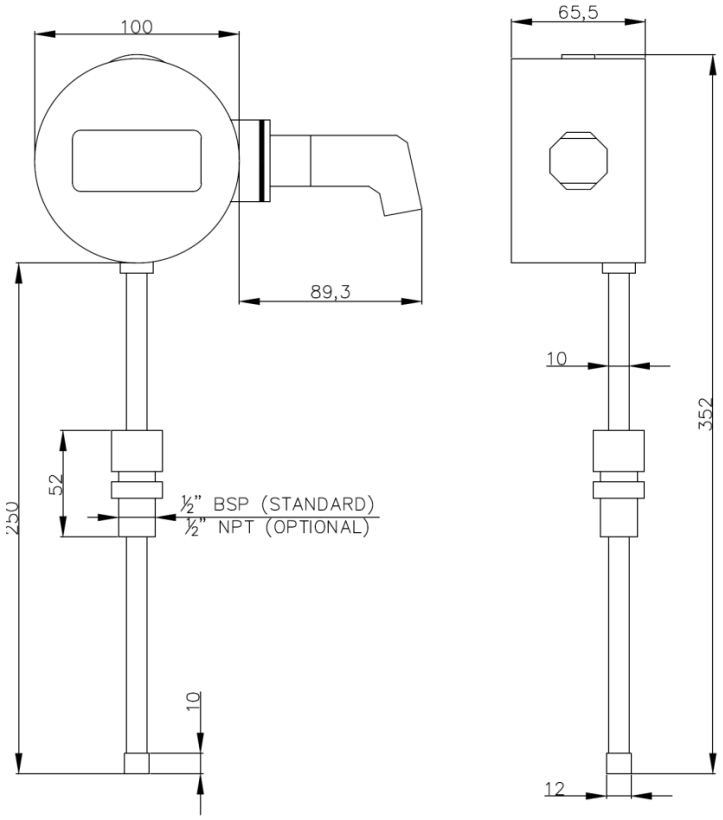

Figure 3: Equipment size

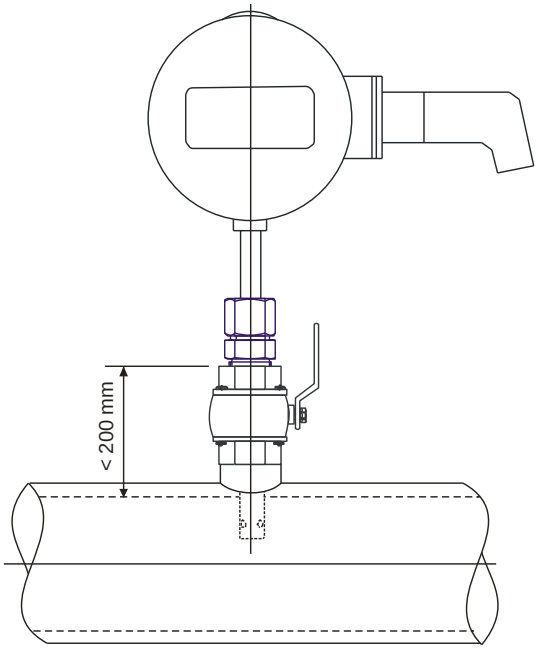

Figure 4: Distance for sensor Installation

3.2.1 Mechanical Installation Procedure

a) Remove the plastic cover that protects the rod tip during transportation.
b) Loosen the nut (1) of the fastening element (2).

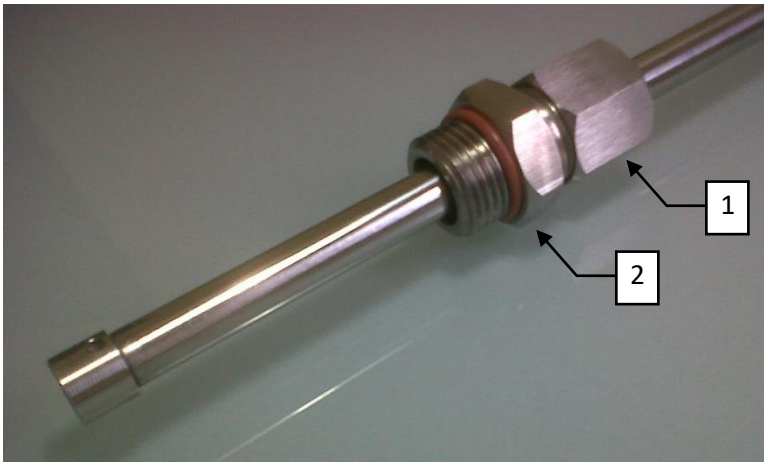

c) Push the fastening element (2) towards the end of the rod, so that the end is hidden in the fastening element.

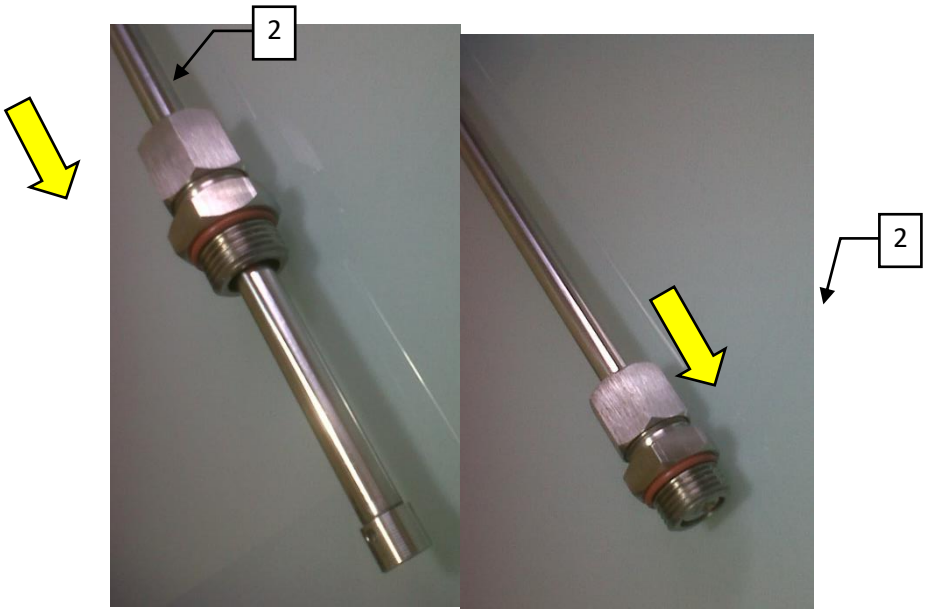

d) Apply sufficient quantity of Teflon tape on the fastening element thread (2).

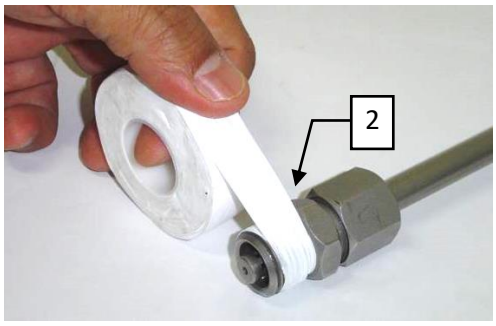

e) Screw the fastening element (2) on the valve (3).

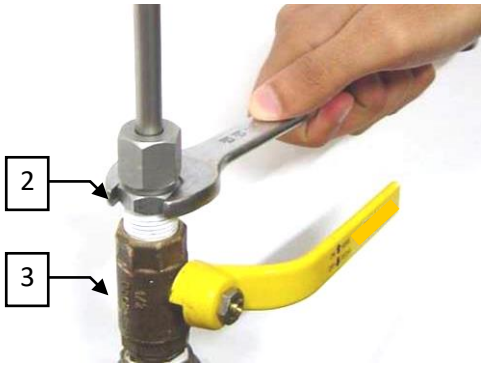

f) Remove the protective lid and expose the air purging (4) and oil sampling bolt. Loosen the air purging bolt (4) by turning it twice counter clockwise.

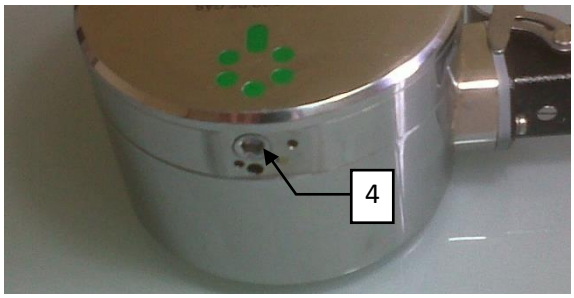

g) Carefully open the valve (3) thus allowing the oil to enter inside the Periscope and push the air out. Collect the oil that comes out the air purging exit (5) with absorbent material or a syringe, thus avoiding it to escape to the environment.

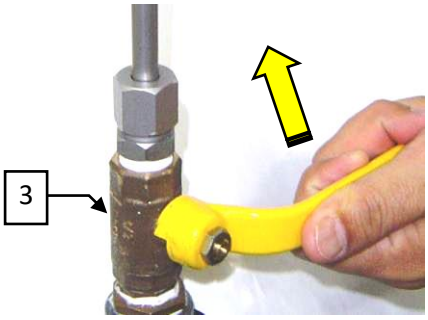

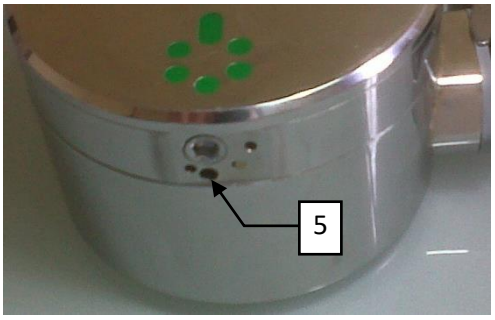

h) When the whole air is expelled from inside the Periscope, tighten the air purging bolt (4) so that the oil flow ceases completely.
i) Clean all the oil on the Periscope and fasten the protective lid of the air purging exit again.
j) Fully open the valve (3) and insert the Periscope up to the desired position, only up to the point where the tip of the rod reaches the oil flow. Special care should be taken so that the tip of Periscope rod does not come too close of areas that are subject to high electric fields, so that the electric insulation of the equipment is not jeopardized.

DO NOT insert the tip of Periscope excessively, thus avoiding the rod from coming too close of areas that are subject to high electric fields, so that the electric insulation of the equipment is not jeopardized.

k) Tighten the nut (1) of the fastening element (2) so that the Periscope is locked in its final position.
l) Rotate the air venting device (7) until its opening (6) is pointing completely downwards, thus preventing accumulation of water rain or other liquids. Do not remove the air venting device (7).

Incorrect positioning of the venting opening or removal of the air venting device may allow water ingress in the GMP, causing its incorrect operation and permanent damage.

m) Carry out electrical installation, as described below.

3.3 Electric Installation

The Periscope is a versatile device, which can meet several different types of applications. This is due to the fact that its installation requires a higher level of study and care than the one required for an equipment entirely dedicated to just one application or task.

Study and understand the application for which the Periscope will be used. Learn which the functional, electric and configuration characteristics of the Periscope are. In this way you will be able to benefit from all the equipment's features and minimize the risks to your safety.

This equipment works at dangerous power levels, and can cause death or serious injuries to the operating and maintenance personnel.

Some special measures must be followed for the project and installation of the Periscope as described below:

A circuit breaker must be installed immediately before the power input (*universal power input - 38~ 275 Vdc/Vac, <5 W, 50/60 Hz)*, which corresponds to pins 1 and 2 of the Periscope. This circuit breaker must have the number of poles that correspond to the number of phases used in power input and the poles must interrupt only the phases, ever the neutral or ground. They should also provide protection against heat to the cables that bring power to the equipment.
The circuit breaker must be close to the equipment where the operator can easily reach it. Additionally, it should possess an indelible identification showing that is the device of electric disconnection of the Periscope.

The following circuit breaker specification is recommended, whenever exclusively used for the Periscope:
AC/DC power source , Phase-Neutral: Single pole circuit breaker, 1 A ≤ In ≤ 2 A, B or C curve, NBR/IEC 60947-2 standards, NBR/IEC 60898 or IEEE 1015-2006;
AC/DC power source, Phase-Phase: Bipolar Circuit Breaker, 1 A ≤ In ≤ 2 A, B or C curve, NBR/IEC 60947-2 , NBR/IEC 60898 or IEEE 1015-2006 standards;

Minimum insulation for the circuits connected to the Periscope is 300 V_{rms} for auxiliary equipment and transducers and for equipment with their own power source up to 50 V_{rms}. Minimum insulation is 1.7 kV_{rms} for equipment powered by up to 300 V_{rms}, according to IEC EN 61010-1.
These values concern the intrinsic insulation of the devices connected to the Periscope. If this value does not apply to equipment or devices connected to the Periscope, this will be explicitly informed in this manual.

The schematics of the Periscope connections show all the connection possibilities the Periscope provides, identifying them according to Figure 5.

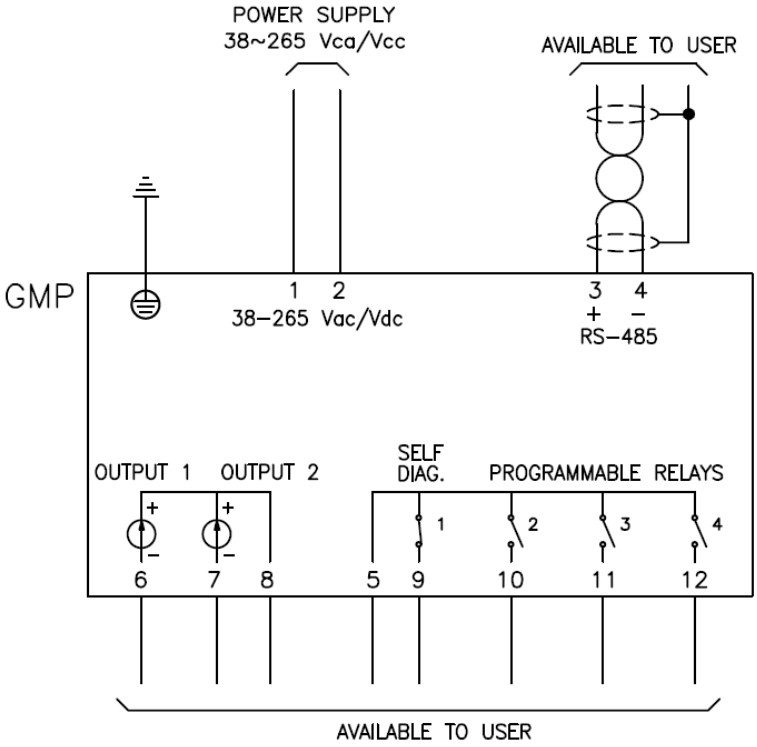

Figure 5: Input and output terminals of the Periscope

Special attention should be paid to the correct connection of the Periscope, during all the installation phases. Errors when connecting the equipment may pose risks to the operator and cause irreversible damage to the equipment. Damage caused by mishandling or misuse are not covered by the warranty.

The Periscope's input and output terminals are available in the removable plug of 12 poles plus ground. Terminal numbering shown in Figure 5 and in Table 1 corresponds to the plug numbering.

Table 1: Input and Output Terminals of the Periscope

INPUTS / OUTPUTS	TERMINALS
1) **Power Input and Ground** Input for universal power supply of 38 to 275 Vdc or 85 to 265 Vac 50/60 Hz, <8 W	*Ground* *01 – dc/ac* *02 – dc/ac*
2) **RS-485 Port** Connection to monitoring or supervisory system through the RTU Modbus or DNP 3.0 protocols, via shield twisted pair cable.	*03 – (+)* *04 – (-)*
3) **Programmable and self-diagnostic relays** Four potential-free relays, three of them NO with user-programmable functions and one NC for self-diagnosis and power outage signalling.	*05 – Common* *09 – Relay 1 (NC, self-check)* *10 – Relay 2 (NA)* *11 – Relay 3 (NA)* *12 – Relay 4 (NA.)*
4) **Current loop analog output** Two programmable outputs for remote indication of measurements. Output range selected by the user in options: 0-1, 0-5, 0-10, 0-20 or 4...20 mA.	*06 – Output 1 (-)* *07 – Output 2 (-)* *08 – Common (+)*

1) Power Input and Ground

The Periscope has a universal power input (38 to 275 Vdc/Vac 50/60 Hz). It is advisable that the Periscope be powered from the direct current auxiliary services in the substation, so that it's continuous operation is guaranteed, especially when it is integrated to a serial communication network for the purposes of collecting data for supervisory or monitoring systems.

2) RS-485 Port

The Periscope can be optionally connected to a data acquisition system (supervisory or monitoring system) through the RS-485 serial communication port. Up to 31 pieces of equipment must be connected in the same communication network. The default communication protocol is Modbus RTU or DNP 3.0.

The connection between the Periscope and the data acquisition system must be done with a shield twisted pair cable, keep the network uninterrupted throughout. If there is need for intermediate connectors pass the shield of the cable through a connector thus avoiding its interruption. The part of the cable without shield due to the patch must be the shortest possible and it is advisable that only one end of the cable shield be grounded. The maximum distance between the network ends must be of 1300 m.

With long communication nets and high baud rates (over 9600 bps) is it advisable to attach a 120 termination resistor to each end of the serial communication network to attenuate the reflected signals. Together with the termination resistors pull-up and pull-down resistors must be used just at one spot of the network, as indicated in Figure 6. Continuous voltage of 5 V to provide power to pull-up and pull-down resistors can be inside the data acquisition system. Note that some communication equipment may already have these resistors installed inside it, and thus do not need external resistors.

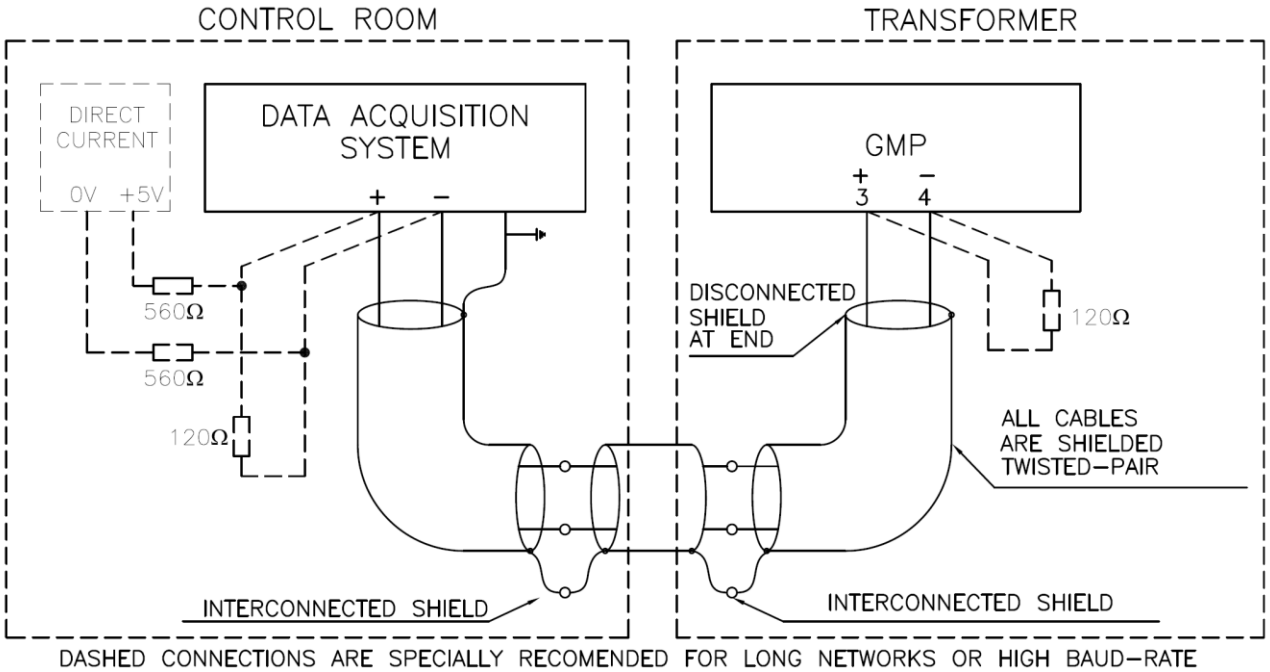

Figure 6: Connection and grounding of the RS-485 serial communication

3) Programmable and self-diagnostic relays

The signalling functions of the output contacts of the Periscope must be programmed by the user when configuring the equipment. The contacts continue to be active whenever the alarm condition is selected.

Programmable relays 1, 2 and 3 are physically of the NO type (normally open) and the relay 4 (self-diagnosis) is of the NC type (normally closed). Relay operation logic could be reversed when configuring the equipment, but if there is no power the physical configuration will prevail.

All the relays can exchange resistive loads with a maximum power of 70 W or 250 VA up to 250 Vdc/Vac. Heat conduction capacity (limit due to the Joule effect) of each individual relay is of 1 A, but the total current in terminal 5 (common point) should not be higher than 2 A.

4) Analog Current Loop Outputs

The Periscope has two analog current loop outputs which can be programmed by the user to remotely indicate the values of the measurements done, such as hydrogen concentration, water content and others. The output current range can also be selected by the user among options 0-1, 0-5, 0-10, 0-20 or 4-20 mA. The maximum current loop output is 10V, which results in the maximum ohm loads below:

Table 2: Maximum Current Loop Output Load

Output Option	Maximum Load
0...1 mA	10000 Ω
0...5 mA	2000 Ω
0...10 mA	1000 Ω
0...20 mA	500 Ω
4...20 mA	500 Ω

The values of the variable selected to be indicated in the analog output corresponding to the beginning and the end of its scale are programmable, according to the measurement chosen for indication. In order to minimize interferences and inductions, it is recommendable to use a shield twisted pair cable, with just one end grounded, to connect the analog outputs to the measurement system.

4 Periscope Measurement Display and Operation

4.1 Front panel

All operations in the Periscope Gas and Moisture Monitor, as reading of measurements and parameter programming, can be done through the front panel, which has a 4-digit alphanumeric display, 5 LEDs to identify the measurement shown on the display, 5 LEDs to indicate alarms and a keyboard with 4 touch-sensitive keys as shown in Figure 7: Front Panel of the Periscope.

> The Periscope keyboard is capacitive, touch-sensitive, and is on its polycarbonate display, just below it, as shown in Figure 7. When touching this region of the screen the keyboard is activated and all four LEDs which indicate the position of the P, ↑, ↓ and ↵ keys light up. The LEDs go off and the keyboard is disabled after 10 sec. when not in use.

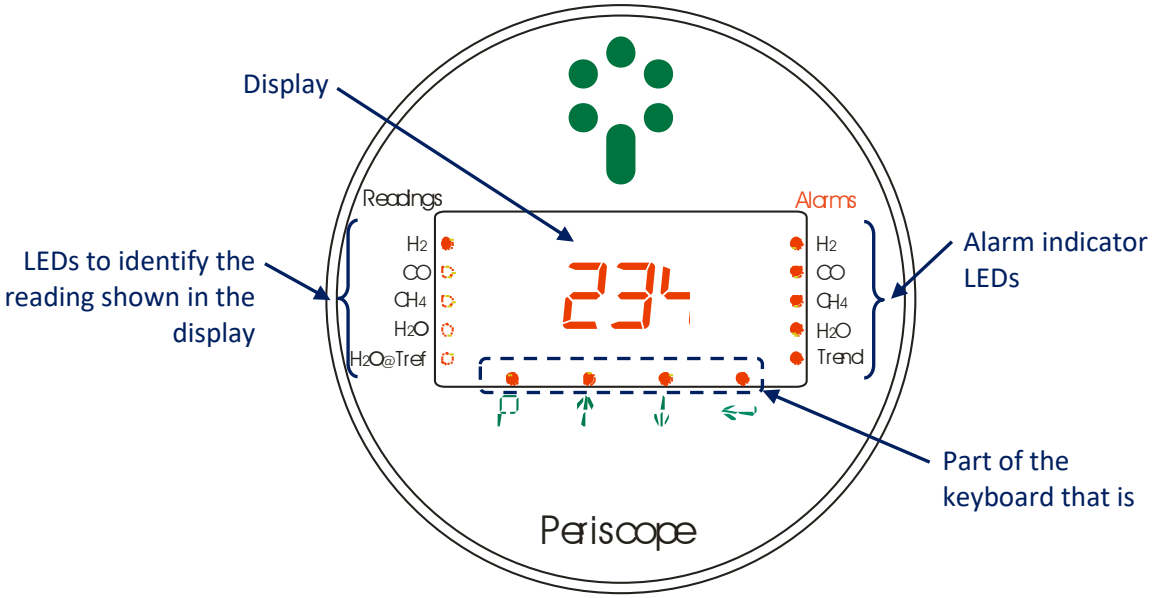

Figure 7: Front Panel of the Periscope

4.2 Main indications on the display

While working normally, the Periscope will show on its display one of the measurements identified by the 5 LEDs to the left of the panel, shown in Figure 7:

- H_2 – hydrogen, in PPM;
- H_2O – content of water, in PPM (only if the GMP has the moisture measurement option);
- $H_2O@T_{ref}$ – water content converted at 20ºC, in PPM (only if the GMP has moisture measurement option);

The user can manually select which of those measurements is going to be shown on the display, through the keys ↑ and ↓.

If what has been programmed by the user in the parameterization of the equipment, after 15 sec keyboard inactivity the display will start to show each one of the 5(five) measurements, sequentially, and each one will remain on the display for 15 sec. Otherwise, the display will indefinitely indicate the last measurement selected by the keyboard.

4.3 Auxiliary Indications on the display

In addition to the indication of the main measurements, the Periscope display can also show several auxiliary measurements upon request. The auxiliary measurement screen is accessed by pressing the ↵ key. The display starts to alternatively indicate the abbreviation of the measurement indicated and its value, as shown in Figure 8.

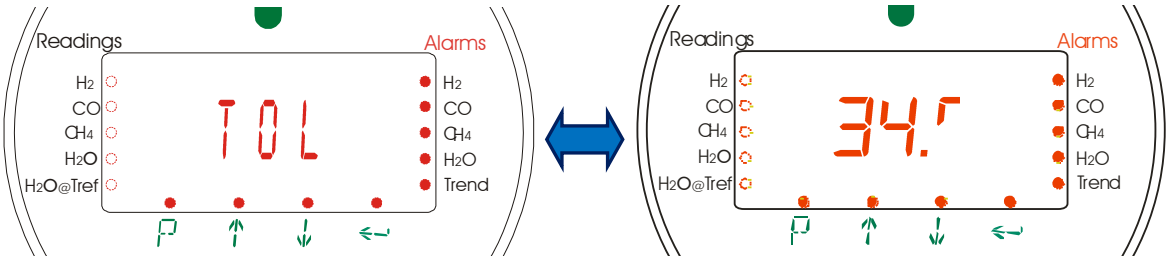

Figure 8: Auxiliary measurement screen

The user can browse the several auxiliary measurements using the ↑ and ↓ keys, in the following sequence:

- TOIL - temperature of the oil at the measurement point, in ºC;
- TCHM - temperature inside the Periscope, in ºC;
- TDH2 - trend of H_2 evolution measurement, in PPM/day;
- DH2H - days to reach high H_2 if the current evolution trend continues;
- DH2V - days to reach too high H_2 alarm, if the evolution trend continues;
- RS - relative water in oil saturation, in%;
- RSTR - relative saturation converted for programmed reference temperature, in%;
- H2OT - evolution trend of the water content measurement, in PPM/day;
- H2OH - days to reach high water content alarm, if the evolution trend continues;
- H2OV - days to reach too high water content, if the trend continues;
- TW2O - evolution trend of the water content measurement at 20ºC, in PPM/day;
- D2OH - days to reach high water content alarm, if the trend continues;
- D2OV - days to reach too high water content alarm at 20ºC if the trend continues.

In order to verify the Periscope firmware version, press P and ↵ keys simultaneously. The identification of the equipment, "GMP" followed by firmware version number, in the "X.XX" format, will be shown on the display for some seconds.

4.4 Alarm Indications

Alarms are shown on the Periscope front panel by the LEDs to the right of the display, as seen in Figure 7:

- H_2 – hydrogen measurement alarm;
- H_2O – moisture alarm (only if the GMP has the moisture measurement optional function);
- Trend – gas concentration evolution trends or water evolution trends (only if the GMP has moisture measurement option).

In case of alarm, the corresponding LED blinks at a speed that identifies the kind of occurrence:

- Slow blinking - (about 1 time/sec): first level alarms, such as high hydrogen, high water content, etc.
- Fast blinking (about 3 times/sec): second level alarms such as Very High hydrogen, Very High water etc.

4.5 Self-Diagnostic Indication

The Periscope has a self-diagnostic system which detects and indicates, through specific circuits and algorithms, the presence of any anomaly in itself, alerting the user that there must be an intervention and making it easy to diagnose the occurrence; this increases the reliability of the information given by the equipment.

If any anomaly takes place, the self-diagnostic contact is enabled for remote indication and the local display alternates between showing the message "DIAG" and the number of the corresponding self-diagnostic, according to Figure 9. The meaning of this code and the recommended action can be found in chapter 7 - Troubleshooting.

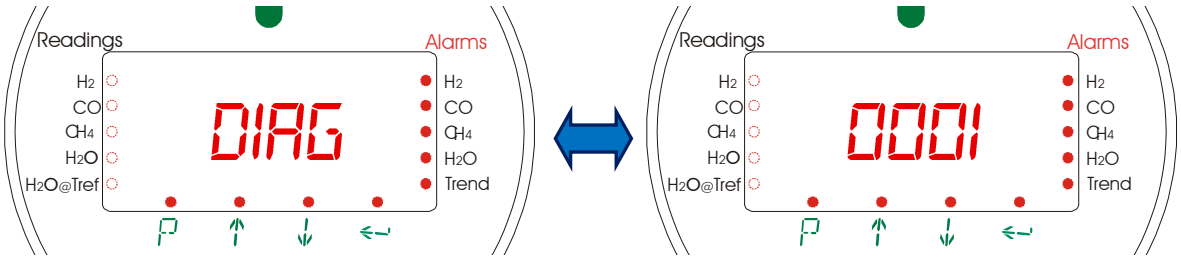

Figure 9: Periscope self-diagnostic indication

In order to verify self-diagnostic memory in the Periscope, press both P and ↓ keys simultaneously. The display will alternatively show the message "MDIA" and the self-diagnostic codes which might have occurred since the last reset of this memory.
During the reading, the self-diagnostic memory can be replaced (reset) by pressing ↵ key for 5 seconds.
Press P to leave self-diagnostic memory screen.

5 Parameter Programming

To ensure gas and moisture will be correctly monitored, some operation parameters must be adjusted in the Periscope, providing the equipment with the information it needs to work. The adjustments can be done through the front panel or through the RS-485 serial communication port.

To access the parameterization menu through the front panel of the Periscope, follow the procedure shown in Figure 10:

a) Press and hold key for 3 seconds. The Periscope will request the 4-digit password to access the menu:

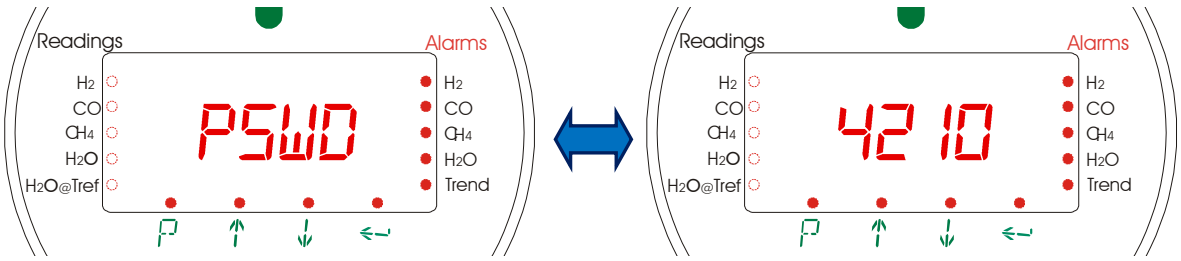

b) Press key to access password editing and use and keys to change it. After adjusting the password number, press to confirm. If the password that was provided is correct the first sub-menu (LNG) of the programming menu is shown:

Figure 10: Access to the parameterization menu of the Periscope

All Periscopes come with the access default password 0 (zero). After the first access the user can personalize the password in the equipment's setup menu.
If the new password is forgotten or lost, Treetech can help in recovering with the number shown on screen when the Periscope prompts the user to enter the password.

Whenever adjusted through the front panel, the parameters are divided in sub-menus, organized in the way shown in **Figure 11**.

Main menu	Sub-menus	Parameters	
	LNG	LNG	
	CLCK	DAY	
		MNTH	
		YEAR	
		HOUR	
		MIN	
	ALRM	H2H	
		H2VH	
		H2OH (optional)	
		H2OV (optional)	
		A20H (optional)	
		A20V (optional)	
		RSH (optional)	
		RSVH (optional)	
		H2T	
		H20T	
		TA20	
	RLAY	RL1	MODE
		RL2	H2
		RL3	H2O (optional)
		RL4	TEND
			DIAG
	CONF	BDR	
		PRT (optional)	
		ADDR (only if MDB is selected in PRT)	
		ADR1 (only if DNP is selected in PRT)	
		ADR2 (only if DNP is selected in PRT)	
		NPW	
	ANOU	AOR	
		AV1	
		BOS1	
		EOS1	
		AV2	
		BOS2	
		EOS2	

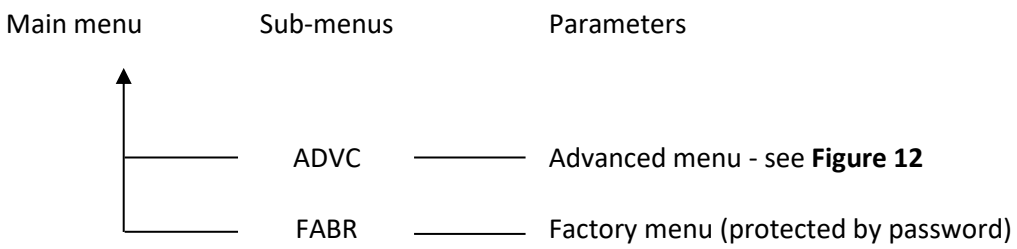

Figure 11: Structure of the sub-menus

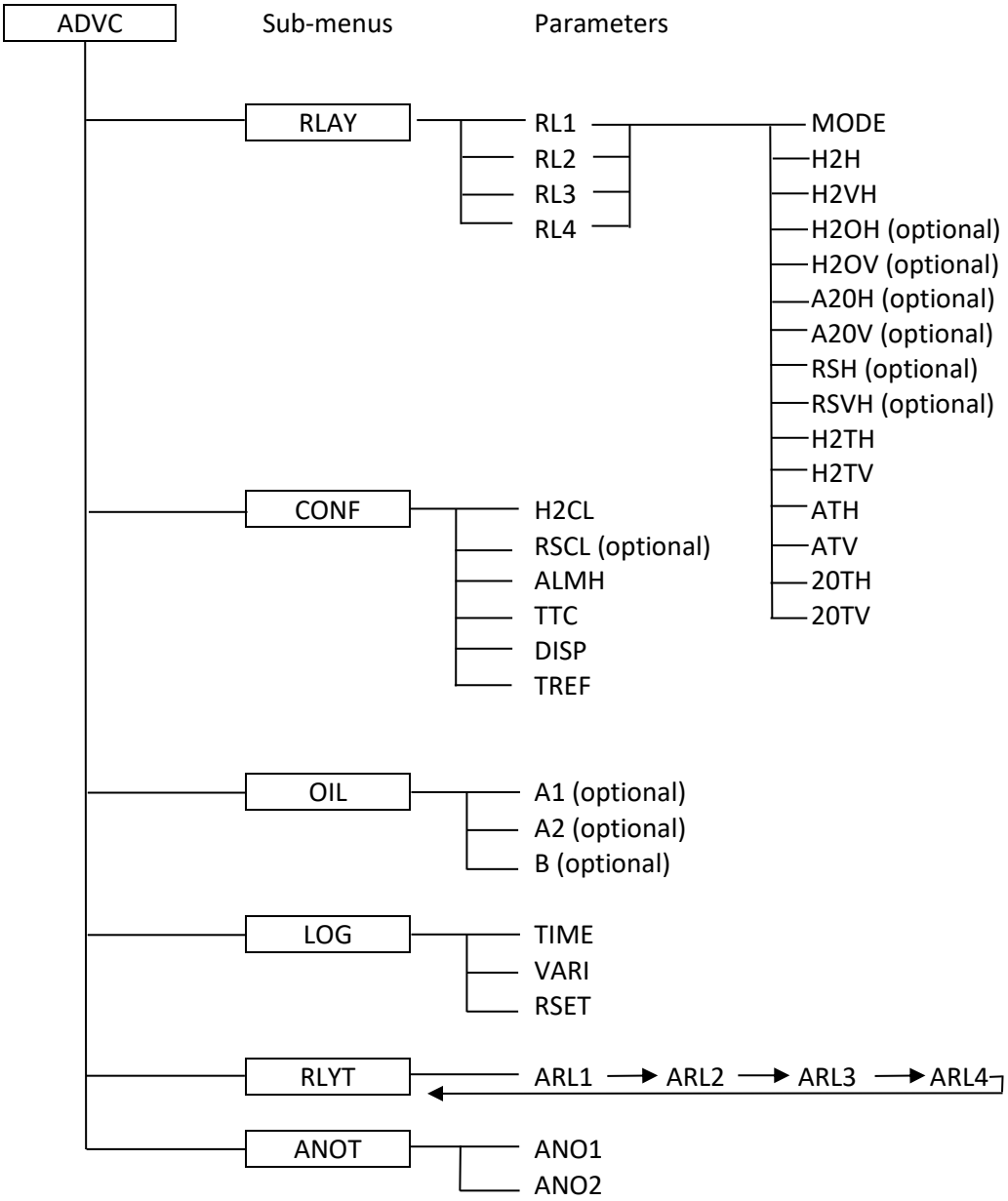

Figure 12: Structure of the advanced sub-menu

Once you get to the main menu of the Periscope, use ↑ and ↓ keys to toggle menus. When the desired sub-menu is shown on the display, press ↵ to access it. At any time, press P to return to the main menu.

Once the desired sub-menu is accessed, use ↑ and ↓ keys to toggle parameters. When the desired parameter is shown on the display press ↵ key to access and edit it with ↑ and ↓ keys. At any time, press P to leave the editing without saving alterations or press ↵ to save the changes and return to the sub-menu.

The parameters corresponding to optional items will only be shown if they are available.

5.1 Language Sub-menu (LNG)

It allows changing the language of the local display, choosing from the following options: Portuguese, English and Spanish.

LNG – Language of local interface **Adjustment range:** POR / ENG / ESP (Portuguese / English / Spanish). **Default:** POR (Portuguese).	LNG ENG

5.2 CLCK Sub-menu –Clock

It adjusts the local clock of the Periscope. Although it doesn't have an internal battery, and is maintenance-free, if there is a power outage the Periscope keeps the clock working for approximately 48 hours.

DAY - Day **Adjustment range:** 1 to 31. **Default:** N/A	DAY 31
MONTH – Month **Adjustment range:** 1 to 12 (January to December). **Default:** N/A	MNTH 12
YEAR – Year **Adjustment range:** 0 to 99 (2000 to 2099). **Default:** N/A	YEAR 10
HOUR - Hour adjustment **Adjustment range:** 0 to 23. **Default:** N/A	HOUR 9
MIN – Minutes **Adjustment range:** 0 to 59. **Default:** N/A	MIN 50

5.3 ALRM SUB-MENU – Alarms

It allows the adjustment of the threshold values for issuing alarms concerning the several measurements the Periscope can do.

H2H – High Hydrogen Concentration (H2) Alarm **Adjustment range:** 0 to 2000 PPM, in 1 PPM steps. **Default:** 200 PPM.	H2H 200
H2VH – Very High Hydrogen (H2) Concentration Alarm **Adjustment range:** 0 to 2000 PPM, in 1 PPM steps. **Default:** 300 PPM.	H2VH 300
H2OH – High Water (H2O) Content Alarm *(Applicable only if the optional moisture measurement function is available)* **Adjustment range:** 0 to 500 PPM, in 1 PPM steps. **Default:** 15 PPM.	H2OH 15
H2OV – High water (H2O) content Alarm *(Applicable only if the optional moisture measurement function is available)* **Adjustment range:** 0 to 500 PPM, in 1 PPM steps. **Default:** 25 PPM.	H2OV 25
A2OH – High water converted at 20ºC (A2O) Alarm *(Applicable only if the optional moisture measurement function is available)* **Adjustment range:** 0 to 500 PPM, in 1 PPM steps. **Default:** 10 PPM.	A2OH 10
A2OV – Very High Water converted at 20ºC (A2O) Alarm *(Applicable only if the optional moisture measurement function is available)* **Adjustment range:** 0 to 500 PPM, in 1 PPM steps. **Default:** 15 PPM.	A2OV 15
RSH – Relative Water Saturation (RS) Alarm *(Applicable only if the optional moisture measurement function is available)* **Adjustment range:** 0 to 100 %, in 1% steps **Default:** 40%.	RSH 40
RSVH – Very High Relative Water Saturation (RS) Alarm *(Applicable only if the optional moisture measurement function is available)* **Adjustment range:** 0 to 100%, in 1% steps **Default:** 50 %.	RSVH 50
H2T– Hydrogen Trend Evolution Alarm Trend alarms are enabled if the prediction of days to reach alarm levels in any of the measurements is less or equal to the value of the parameter. **Adjustment range:** 1 to 90 days, in 1-day steps. **Default:** 14 days.	H2T 14
H2OT– Moisture Trend Evolution Alarm Trend alarms are enabled if the prediction of days to reach alarm levels in any of the measurements is less or equal to the value of the parameter. *(Applicable only if the optional is available)* **Adjustment range:** 1 to 90 days, in 1-day steps. **Default:** 14 days.	H2OT 14

TA20– Moisture at 20°C Trend Evolution Alarm Trend alarms are enabled if the prediction of days to reach alarm levels in any of the measurements is less or equal to the value of the parameter. **Adjustment range:** 1 to 90 days, in 1-day steps. **Default:** 14 days.	TA20 14

5.4 RLAY Sub-Menu – Relays

It allows easy function programming and to control the Periscope's output relay operation mode easily (detailed programming can be done through the ADVC/RLAY menu, see item 5.7). When accessing the sub-menu, the relay selection parameter which will be programmed in the sequence is shown:

RL1...RL4 – Selection of the output relay that will be programmed **Adjustment range:** RL1 to RL4 (relay 1 to relay 4). **Default:** N/A	RL2

After selecting the relay that the user desires to program using ↑ and ↓ keys, press ↵ to advance to its pertinent options. Press P to return to the relay selection above.

MODE – It toggles the working logic of the relay between NORMAL and INVERTED **Adjustment range:** NORM or INVE, where: NORM: relay coil is energized if at least one of the alarm conditions programmed to the relay is active (alarm is occurring). INVE: relay coil is de-energized if at least one of the alarm conditions programmed to the relay is active (alarm is occurring). Example: if none of the alarm conditions programmed to the relay is active (no alarm is occurring) and parameter MODE is set to NORM, the relay will be at the condition shown in figure 5, as if the GMP was de-energized. **Default:** INVE for relay 1; NORM for relays 2, 3 and 4.	MODE NORM
H2 – Enables the signalling of all alarms connected to hydrogen on the relay. **Adjustment range:** No, Yes or Advanced Programming – according to the programming in the ADVC→ RELAY menu. **Default:** YES for relay 2, NO for relays 1, 3 and 4.	H2 YES
H20 – It enables the signalling of moisture connected alarms on the relay **Adjustment range:** No, Yes or Advanced Programming – according to the programming in the ADVC→RELAY menu. **Default:** YES for relay 3, NO for relays 1, 2 and 4.	H20 YES
TEND – It enables the signalling of trend related alarms on the relay **Adjustment range:** No, Yes or Advanced Programming – according to the programming in the ADVC→RELAY menu. **Default:** NO for relays 1 to 4.	TEND NO

DIAG – It enables the signalling of trend related alarms on the relay **Adjustment range:** NO or YES. **Default:** YES for relay 1, NO for relays 2 to 4.	DIAG NO

5.5 CONF Sub-menu– Configuration

It allows programming the general setup (configuration) menus of the Periscope.

BDR – It selects the transmission speed (baud rate) of the RS485 serial port **Adjustment range:** 4.8 / 9.6 / 19.2 / 38.4 / 57.6 / 115.2 kbps. **Default:** 9.6 kbps.	BDR 9.6
PRT – Communication protocol used by the Periscope in RS-485 serial communication. The Periscope has the Modbus protocol as default. It also can have the DNP 3.0 protocol, and in this case the protocol used is selected in the PRT parameter. **Adjustment range:** MDB / DNP. **Default:** MDB.	PRT MDB
ADDR – Address of the Periscope in the RS-485 serial communication network with Modbus protocol ***(Applicable only if parameter PRT is set to MDB - modbus).*** **Adjustment range:** 1 to 255, in steps of 1. **Default:** 1.	ADDR 1
ADR1 – First part (thousand) of GMP address in RS485 with DNP3.0 protocol ***(Applicable only if parameter PRT is set to DNP).*** GMP address in the communication network is the composition of first and second parts of the address. Example: if ADR1=1 and ADR2=34, then the actual address is 1034. **Adjustment range:** 0 to 65, in steps of 1. **Default:** 0.	ADR 1 0
ADR2 – Second part (hundred, ten and unit) of GMP address in RS485 with DNP3.0 protocol ***(Applicable only if parameter PRT is set to DNP).*** GMP address in the communication network is the composition of first and second parts of the address. Example: if ADR1=1 and ADR2=34, then the actual address is 1034. **Adjustment range:** 1 to 999 if ADR=0 or 0 to 999 if ADR1>0 and ADR<65 or 0 to 532 if ADR1=65, in steps of 1. **Default:** 1.	ADR2 1
NPW – It changes the access password to the main Periscope menu. **Adjustment range:** 0 to 9999. **Default:** 0. (*The Periscope comes with the default password 0).*	NPW 0

5.6 ANOU Sub-menu – Analog Output

This sub-menu allows access to the parameters of the analog output.

AOR – Analog output range. It selects the analog output current loop default. **Adjustment range:** 0-1 / 0-5 / 0-10 / 0-20 / 4-20 mA. **Default:** 4-20 mA	AOR 4-20
AV1– Selects the variable associated to the analog output 1 **Adjustment range:** 0 to 13, where: 0 = H2 Concentration 1 = H2 evolution trend 2 = Oil Temperature 3 = Chamber Temperature 4 =Not used 5 = Not Used 6 = Not used 7 =Not used 8 = Water Content H2O 9 = H2O Evolution Trend 10 = H2O@20ºC Water Content 11 = H2O@20ºC Evolution Trend 12 = Water Relative Saturation RS% 13 = Not used **Default:** 0 (H2 Concentration).	AV1 0
BOS1 – Variable value corresponding to the beginning of the analog output 1 range **Adjustment range:** -55 to 2000, in steps of 1 (measurement unit according to the variable selected in VA1) **Default:** 0.	BOS1 0
EOS1 – Value of the variable corresponding to the end of the analog output 1 range **Adjustment range:** -55 to 2000, in steps of 1 (measurement unit according to the variable selected in VA1) **Default:** 2000.	EOS1 2000
AV2 – Selects the variable associated to analog output 2 **Adjustment range:** 0 to 13 (meaning according to table in parameter AV1) **Default:** 8 (water content H2O).	AV2 0
BOS2 – Value of the variable corresponding to the beginning of the analog output 2 range **Adjustment range:** -55 to 2000, in steps of 1 (measurement unit according to variable selected in VA2). **Default:** 0.	BOS2 0
EOS2 – Value of the variable corresponding to the end of analog output 2 range **Adjustment range:** -55 to 2000, in steps of 1 (measurement unit according to variable selected in VA2). **Default:** 100.	EOS2 500

5.7 ADVC / RLAY Sub-Menu – Advanced / Relays

It allows advanced programming of the functions and of the working mode of the Periscope's output relays. When this sub-menu is accessed, the relay parameter which will be programmed will be shown in the sequence:

RL1...RL4 – Selection of the output relay that will be programmed **Adjustment range:** RL1 to RL4 (relay 1 to relay 4). **Default:** N/A	RL2

After selecting the relay to be programmed using ↑ and ↓ keys, press ↵ to advance to its pertinent options. Press P to return to the relay selection above.

MODE – It toggles the working logic of the relay between NORMAL and INVERTED **Adjustment range:** NORM or INVE, where: NORM: relay coil is energized if at least one of the alarm conditions programmed to the relay is active (alarm is occurring). INVE: relay coil is de-energized if at least one of the alarm conditions programmed to the relay is active (alarm is occurring). Example: if none of the alarm conditions programmed to the relay is active (no alarm is occurring) and parameter MODE is set to NORM, the relay will be at the condition shown in figure 5, as if the GMP was de-energized. **Default:** INVE for relay 1; NORM for relays 2, 3 and 4.	MODE NORM
H2H – Enables High Hydrogen Alarm signalling on the relay **Adjustment range:** NO or YES. **Default:** YES for relay 2, NO for relays 1, 3 and 4.	H2H YES
H2VH – Enables Very High hydrogen alarm signalling on the relay. **Adjustment range:** NO or YES. **Default:** YES for relay 2, NO for relays 1, 3 and 4.	H2VH YES
H2OH – Enables High Water Content Alarm signalling on the relay **Adjustment range:** NO or YES. **Default:** YES for relay 3, NO for relays 1, 2 and 4.	H2OH YES
H2OV – Enables Very High Water Content Alarm on the relay **Adjustment range:** NO or YES. **Default:** YES for relay 3, NO for relays 1, 2 and 4.	H2OV YES
A2OH – Enables High Water Content at 20 °C Alarm signalling on the relay **Adjustment range:** NO or YES. **Default:** YES for relay 3, NO for relays 1, 2 and 4.	A2OH YES
A2OV – Enables Very High Water Content at 20 °C signalling on the relay **Adjustment range:** NO or YES. **Default:** YES for relay 3, NO for relays 1, 2 and 4.	A2OV YES

RSH – Enables High Relative Saturation Alarm signalling on the relay **Adjustment range:** NO or YES. **Default:** YES for relay 3, NO for relays 1, 2 and 4.	RSH YES
RSVH – Enables Very High Relative Saturation Signalling on the relay **Adjustment range:** NO or YES. **Default:** YES for relay 3, NO for relays 1, 2 and 4.	RSVH YES
H2TH – Enables High Hydrogen Trend Signalling on the relay **Adjustment range:** NO or YES. **Default:** NO for relays 1 to 4.	H2TH NO
H2TV – Enables Very High Hydrogen Trend Signalling on the relay **Adjustment range:** NO or YES. **Default:** NO for relays 1 to 4.	H2TV NO
ATH – Enables High Water Content Trend Signalling on the relay **Adjustment range:** NO or YES. **Default:** NO for relays 1 to 4.	ATH NO
ATV – Enables Very High Water Content Trend Signalling on the relay **Adjustment range:** NO or YES. **Default:** NO for relays 1 to 4.	ATV NO
20TH – Enables High Water Content at 20°C Trend Signalling on the relay **Adjustment range:** NO or YES. **Default:** NO for relays 1 to 4.	20TH NO
20TV – Enables Very High Water Content at 20°C Trend Signalling on the relay **Adjustment range:** NO or YES. **Default:** NO for relays 1 to 4.	20TV NO

5.8 ADVC / CONF Sub-menu – Advanced / Setup

It allows the user to program the advanced parameters of the general Periscope setup.

H2CL - Fine Calibration (Offset) of H2 measurement The adjusted value will be added to the H2 concentration calculated by the Periscope, allowing a fine adjustment of the indication as an offset. **Adjustment range:** -20 to + 20, in 1ppm steps. **Default:** 0 PPM.	H2CL 0
RSCL – Fine Calibration (offset) of the Relative Saturation measurement The adjusted value will be added to the relative saturation% calculated by the Periscope, allowing a thin settlement of the indication as offset. **Adjustment range:** -20 to + 20, in steps of 0.1%. **Default:** 0 %.	RSCL 0
ALMH – Alarm disabling Hysteresis Necessary reduction in measurement which caused an alarm so it is disabled. **Adjustment range:** 0 to 20 %, in 1% steps **Default:** 10 %.	ALMH 10
TTC – Time constant to calculate evolution trends. Time Constant used in the bandpass filter to calculate the several evolution trends. **Adjustment range:** 1 to 720 hours, in 1h steps. **Default:** 24 h.	TTC 24
DISP– Exhibition mode of the measurements at the local Periscope display **Adjustment range:** SCRL / FIXD (automatic Alternation of the indications/Fixed indication) **Default:** SCRL.	DISP SCRL
TREF – Reference Temperature used in calculating the Relative Saturation converted at the Reference Temperature (RSTR) **Adjustment range:** -55 to 200 ºC, in 1 ºC steps. **Default:** 25 ºC.	TREF 25

5.9 ADVC / OIL Sub-menu – Advanced / Oil

It allows the programming of the water in oil saturation feature.

A1 – First part of the A constant of water solubility in oil (unit and tenth)

It allows the Periscope to determine the solubility of water in oil. Typical values can be adjusted, according to the type of oil, according to the table below, or values obtained in tests. Combining parameters A1 and A2 we form parameter A. Example: A1 = 7.0 and A2 = 895 ➔ Parameter TO = 7.0895

Type of oil	Typical value of A
Mineral	7.0895
Silicon	6.2906
Envirotemp FR3	5.3318

Adjustment range: 0.1 to 9.9, in 0.1 steps.
Default: 7.0.

A1
7.0

A2 – Second part of the constant A of solubility of water in oil (hundredths)

Complement of parameter A1, to form parameter A.

Adjustment range: 0 to 999, in steps of 1.
Default: 895.

A2
895

B – Constant B of solubility of water in oil

It allows the Periscope to determine the solubility of water in oil. Typical values can be adjusted, according to the type of oil, according to the table below, or values obtained in tests.

Type of oil	Typical value of B
Mineral	1567
Silicon	1187
Envirotemp FR3	687

Adjustment range: 0 to 9999, in steps of 1.
Default: 1567.

B
1567

5.10 ADVC / LOG Sub-menu – Advanced / Mass Memory

It allows the programming of the mass memory configuration of the Periscope.

TIME – Time interval to record the measurements in the non-volatile memory.

Adjustment range: 1 to 1440 minutes, in 1 minute steps.
Default: 60 min.

TIME
60

VARI – Variation in the measurements that triggers a recording in the non-volatile memory.

Adjustment range: 1 to 20%, in 1% steps.
Default: 10 %.

VARI
10

RSET – Reset command of the mass memory This action must be confirmed by selecting option YES (YES). All data stored in the mass memory will be deleted (the operation and parameterization of the equipment are not affected). **Adjustment range:** NO OR YES. **Default:** NO.	RSET NO

5.11 ADVC / RLYT Sub-menu – Advanced / Relay Test

ARL1…4 – Test Relay 1…4. **Adjustment range:** ON and OFF. Select ON using ↑ arrow then press ↵ to confirm. Upon pressing ↵, ARL2, ARL3 and ARL4 will follow. After ARL4, the menu will exit. **Default:** OFF.	ARL1 OFF

5.12 ADVC / ANOT Sub-menu – Advanced Analog Output Test

ANO1 or 2 – Test Analog Output 1 or 2. **Adjustment range:** 0 to 100. While in the menu, the selected analog output will output current ranging from 0 to 100% of its programmed scale. **Default:** 0.	ANO1 OFF

5.13 FACT Sub-menu – Factory Parameters

Password-protected Sub-menu to be used only by Treetech's technical support. Is not accessible by the user of the equipment.

After an attempt of accessing the factory menu with a wrong password, the message VOID will show on the Periscope's display for some seconds. The time for which this message shows increases as new attempts are made with a wrong password.
After 5 attempts with the incorrect password, the Periscope will completely block the access to the Factory Menu and the VOID message will be permanently shown on the display. Although the equipment is not affected and continues to work, this user will lose his warranty.

6 Service start-up procedures.

Once the Periscope is installed according to this manual, start-up must follow the steps below:

1. Verify the mechanical and electrical installations according to the recommendations of the item 3 -Project and Installation in this manual. Check if the electrical connections are done correctly (for instance, through continuity tests).
2. Energize the Periscope with voltage from 38 to 275Vdc or Vac or 60 Hz.
3. Perform the whole parameterization of the Periscope according to the instructions of the item 5 - Parameter Programming in this manual. The parameterization done may be recorded in the form supplied on page 8.45, Appendix A – Periscope Parameterization Tables.
4. With a DC miliamp meter, check whether the current loop outputs show values matching the values of the selected measurements.
5. With a continuity sensor, test the actuation of the alarm contacts. The locking and opening of the contacts can be forced by altering their operating mode from NO to NC and vice versa.
6. With adequate computer, communication converter and software, as applicable, check if the Periscope RS485 port is working as it should.
7. Check whether the gas concentration and water content measurements are matching what is in the oil through gas chromatography tests and water content tests in oil samples. In this comparison, take into consideration the following factors:
    a. Error ranges of the measurements taken in the lab;
    b. Measures to prevent contamination of the oil samples (more than one sample should be collected and counter-proof tests should be performed).
    c. Periscope admissible error ranges (see Appendix B – Technical Data).

7 Troubleshooting

7.1 Self-Diagnostic Indication

The Periscope has a self-diagnostic system which allows the system to detect and indicate, through specific circuits and algorithms, the presence of any anomaly in itself, alerting the user that there must be an intervention and making it easy to diagnose the occurrence; this increases the reliability of the information given by the equipment.

If any anomaly takes place, the self-diagnostic contact is enabled for remote indication and the local display alternates between showing the message "DIAG" and the number of the corresponding self-diagnostic, according to Figure 13. The meaning of this code and the recommended action are shown in Table 3.

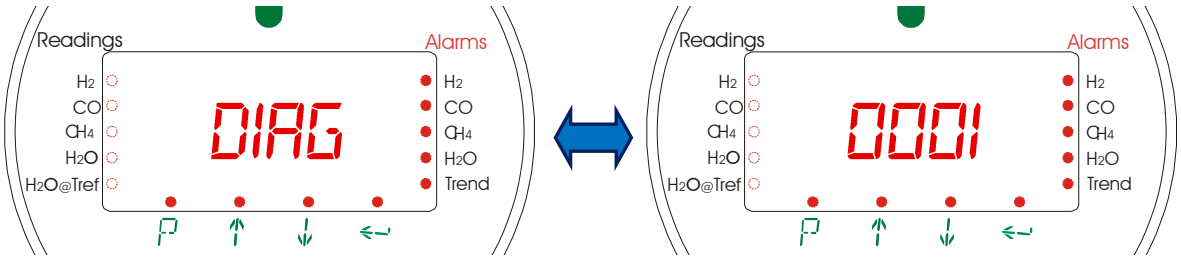

Figure 13: Self-diagnostic indication in the Periscope

Table 3: Self-Diagnostic Codes

0000 Displayed Code	Digit 1		
	Description	**Probable Causes**	**Recommended Actions**
0	No failure.	- - -	- - -
1	Internal Failure EEPROM memory	Data inconsistence in the EEPROM memory	- Replace defective equipment - Contact Treetech's technical support
2	Internal Failure - RTD measurement	Temperature reading failure	- Replace defective equipment - Contact Treetech's technical support
3	See codes 1 and 2 above.	Simultaneous occurrence of the codes 1 and 2	Proceed like indicated for the codes 1 and 2
4	Internal failure - moisture measurement	Failure in reading moisture in oil	- Replace defective equipment - Contact Treetech's technical support
5	See codes 1 and 4 above.	Simultaneous occurrence of the codes 1 and 4	Proceed as indicated for codes 1 and 4
6	See codes 2 and 4 above.	Simultaneous occurrence of codes 2 and 4	Proceed as indicated for codes 2 and 4
7	See codes 1, 2 and 4 above.	Simultaneous occurrence of the codes 1, 2 and 4.	Proceed like indicated for the codes 1, 2 and 4

0000 Displayed Code	Digit 2		
	Description	**Probable Causes**	**Recommended Actions**

0	No failure.	- - -	- - -
1	Internal failure – oil temperature measurement	Failure in reading the oil temperature	- Replace defective equipment - Contact Treetech's technical support
4	Internal failure – internal temperature measurement	Failure in reading internal temperature	- Replace defective equipment - Contact Treetech's technical support
5	See codes 1 and 4 above.	Simultaneous occurrence of codes 1 and 4	Proceed as indicated for codes 1 and 4
8	Internal failure – overflow	Processing failure	- Replace defective equipment - Contact Treetech's technical support
9	See codes 1 and 8 above.	Simultaneous occurrence of codes 1 and 8	Proceed as indicated for codes 1 and 8
C	See codes 4 and 8 above.	Simultaneous occurrence of codes 4 and 8	Proceed as indicated for codes 4 and 8
D	See codes 1, 4 and 8 above.	Simultaneous occurrence of the codes 1, 4 and 8	Proceed as indicated for the codes 1, 4 and 8

0000 Displayed Code	Digit 3		
	Description	**Probable Causes**	**Recommended Actions**
0	No failure.	- - -	- - -
1	Internal Failure FLASH memory	Data inconsistence in the FLASH memory	- Replace defective equipment - Contact Treetech's technical support
2	Oil Pump Malfunctioning	Internal oil pump failure	- Replace defective equipment - Contact Treetech's technical support
3	See codes 1 and 2 above.	Simultaneous occurrence of the codes 1 and 2	Proceed like indicated for the codes 1 and 2

0000 Displayed Code	Digit 4		
	Description	**Probable Causes**	**Recommended Actions**
0	No failure.	- - -	- - -
1	Internal failure – H2 measurement	Failure in reading the H2 sensor	- Replace defective equipment - Contact Treetech's technical support

7.2 Troubleshooting of problems not connected to the Periscope's self-diagnostic

If you encounter difficulties or problems in operating the Periscope that are not connected to any self-diagnostic situation, we suggest that you try to find possible causes and simple solutions in the list below.

If this information is not enough to solve the problem please contact Treetech's technical support or its authorized representative.

Table 4: Troubleshooting of problems not connected to self-diagnoses

The Periscope does not communicate with data acquisition system	
Probable Causes	Recommended Actions
Incorrect serial communication parameter programming in the Periscope.	Check the correct programming of the following parameters in the CONF sub-menu : Baud-rate – BDR parameter Address – ADDR parameter Protocol – PRT parameter
Bad contact, disconnection or inversion of one of the serial communication cables	Check for bad contact, disconnections or inversions in the whole communication cable, including the connection to the Periscope, to passage connectors and the data acquisition system.
Unshielded cable, groundless shield or incorrect grounding at the Periscope's acquisition system connection.	Use shield cable, connected according to the recommendations hereof.
Kind of cable used is incorrect.	The communication cable must be of the shield twisted pair type.
Distance between the extremes of a communication net is above 1300m.	If the circuit is over 1300 m repetition either repeater modules need to be used or optical fiber have to be applied.

Indication of incorrect current loop output (mA)	
Probable Causes	Recommended Actions
Maximum load allowed for the current output is exceeded	Check the maximum allowed load for each selected output pattern.
Incorrect programming of current output parameters.	Check the programming of the following parameters: Scale of the mA output – AOR Analog variable – AV1 and AV2 Beginning of Scale – BOSA and BOS2 End of Scale – EOS1 and EOS2
Incorrect connection of the mA output cable.	Check for a correct connection of the cables and end connectors (polarity, eventual short circuits, open links) between the Periscope and the measurement system of the mA outputs.
Lack of shield grounding, interrupted shield or cable with shield grounded at both ends of the circuit.	Lack of grounding or incorrect grounding may allow noise or induced transients to prevent measuring the current loop. Check the cable, connections (passage connectors) and grounding.

8 Appendices

8.1 Appendix A – Periscope Parameterization Tables

A Table 5 was prepared for equipment with Firmware 1.00 version onwards.

The purpose of this table is to help in the documentation of the parameters used in the equipment, thus making the operator's work easier and eventually, facilitating the work of the technical support.

Some sub-menus and parameters will be shown only if the respective optional functions are available.

Table 5: Auxiliary Table for Periscope Parameterization

Periscope Gas and Moisture Monitor (GMP) - Parameterization Sheet			
Number Series		**Date**	
Identification:		**Person in charge:**	

Sub-menu	Parameter	Description	Adjusted Value			
LNG	LNG	Language of local interface	☐ POR ☐ ENG ☐ ESP			
ALRM	H2H	High H2 alarm	PPM			
	H2VH	Very High H2 alarm	PPM			
	H2OH	High water content alarm	PPM			
	H2OV	Very High water content alarm	PPM			
	A20H	High water content at 20 °C alarm	PPM			
	A20V	Very High water content at 20 °C alarm	PPM			
	RSH	High relative saturation alarm	%			
	RSVH	Very High relative saturation alarm	%			
	H2T	Hydrogen trend alarm	days			
	H2OT	Moisture trend alarm	days			
	TA20	Moisture at 20ºC trend alarm	days			
RLAY			***Relay 1***	***Relay 2***	***Relay 3***	***Relay 4***
	MODE	Logic of the relay NORMAL / INVERTED	☐ NORM ☐ INVE	☐ NORM ☐ INVE	☐ NORM ☐ INVE	☐ NORM ☐ INVE
	H2	It associates the relay to the H2 alarms	☐ NO ☐ YES ☐ ADVC	☐ NO ☐ YES ☐ ADVC	☐ NO ☐ YES ☐ ADVC	☐ NO ☐ YES ☐ ADVC
	H2O	It associates the relay to moisture alarms	☐ NO ☐ YES ☐ ADVC	☐ NO ☐ YES ☐ ADVC	☐ NO ☐ YES ☐ ADVC	☐ NO ☐ YES ☐ ADVC
	TEND	It associates the relay to trend alarms	☐ NO ☐ YES ☐ ADVC	☐ NO ☐ YES ☐ ADVC	☐ NO ☐ YES ☐ ADVC	☐ NO ☐ YES ☐ ADVC
	DIAG	It associates the relay to self-diagnostic alarms	☐ NO ☐ YES	☐ NO ☐ YES	☐ NO ☐ YES	☐ NO ☐ YES
CONF	BDR	Baud-rate of the serial communication	kbps			
	PRT	Communication Protocol	☐ MDB ☐ DNP			
	ADDR	Address in RS485 (for PRT=MDB)				
	ADR1	Address 1st part in RS485 (for PRT=DNP)				
	ADR2	Address 2nd part in RS485 (for PRT=DNP)				
	NPW	New password to access to the menus				

Sub-menu	Parameter	Description	Adjusted Value			
ANOU	AOR	Range of analog outputs (mA)	☐ 0-1 ☐ 0-5 ☐ 0-10 ☐ 0-20 ☐ 4-20			
	AV1	Variable of analog output 1				
	BOS1	Beginning of the scale of analog output 1				
	EOS1	End of the scale of analog output 1				
	AV2	Variable of analog output 2				
	BOS2	Beginning of the scale of analog output 2				
	EOS2	End of the scale of analog output 2				
ADVC / RLAY			***Relay 1***	***Relay 2***	***Relay 3***	***Relay 4***
	MODE	Logic of the relay NORMAL / INVERTED	☐ NORM ☐ INVE	☐ NORM ☐ INVE	☐ NORM ☐ INVE	☐ NORM ☐ INVE
	H2H	High H2 alarm	☐ NO ☐ YES	☐ NO ☐ YES	☐ NO ☐ YES	☐ NO ☐ YES
	H2VH	Very High H2 alarm	☐ NO ☐ YES	☐ NO ☐ YES	☐ NO ☐ YES	☐ NO ☐ YES
	H2OH	High H2O alarm	☐ NO ☐ YES	☐ NO ☐ YES	☐ NO ☐ YES	☐ NO ☐ YES
	H2OV	Very High H2O alarm	☐ NO ☐ YES	☐ NO ☐ YES	☐ NO ☐ YES	☐ NO ☐ YES
	A2OH	High H2O@20ºC alarm	☐ NO ☐ YES	☐ NO ☐ YES	☐ NO ☐ YES	☐ NO ☐ YES
	A2OV	Very High H2O@20ºC alarm	☐ NO ☐ YES	☐ NO ☐ YES	☐ NO ☐ YES	☐ NO ☐ YES
	RSH	High RS% alarm	☐ NO ☐ YES	☐ NO ☐ YES	☐ NO ☐ YES	☐ NO ☐ YES
	RSVH	Very High RS% alarm	☐ NO ☐ YES	☐ NO ☐ YES	☐ NO ☐ YES	☐ NO ☐ YES
	H2TH	High Hydrogen Trend	☐ NO ☐ YES	☐ NO ☐ YES	☐ NO ☐ YES	☐ NO ☐ YES
	H2TV	Very High Hydrogen Trend	☐ NO ☐ YES	☐ NO ☐ YES	☐ NO ☐ YES	☐ NO ☐ YES
	ATH	High Moisture Trend	☐ NO ☐ YES	☐ NO ☐ YES	☐ NO ☐ YES	☐ NO ☐ YES
	ATV	Very High Moisture Trend	☐ NO ☐ YES	☐ NO ☐ YES	☐ NO ☐ YES	☐ NO ☐ YES
	20TH	High Moisture at 20ºC Trend	☐ NO ☐ YES	☐ NO ☐ YES	☐ NO ☐ YES	☐ NO ☐ YES
	20TV	Very High Moisture at 20ºC Trend	☐ NO ☐ YES	☐ NO ☐ YES	☐ NO ☐ YES	☐ NO ☐ YES
ADVC / CONF	H2CL	H2 Calibration	PPM			
	RSCL	RS Calibration	%			
	ALMH	Alarm Hysteresis	%			
	TTC	Trend time constant	days			
	DISP	Display mode	☐ SCRL ☐ FIXD			
	TREF	Reference Temperature for RSTR	ºC			
ADVC / OIL	A1	Constant A of water solubility				
	A2	Constant A of water solubility				
	B	Constant B of water solubility				
ADVC / LOG	TIME	Recording time interval	minutes			
	VARI	Variation in the measurements for recording purposes	%			

8.2 Appendix B – Technical Data

Power Supply:	38 to 275 Vdc or 85 to 265 Vac 50/60Hz
Maximum consumption:	< 8 W
Degree of Protection:	IP 66 / NEMA 4
Electrical connections – crimp plug	0.3 to 2,5mm^2, 22 to 14 AWG
Connection to the insulating oil	1/2" BSP or 1/2" NPT (it is recommended that ball or gate valves are used)
Working Temperature - environment	-40 to + 85 ºC
Working temperature – insulating oil:	-10 to + 90 ºC
Admissible Oil Pressure:	+0.1 MPa / Full Vacuum
Outputs to relays: **Kind and functions (standard) :** **Maximum switching power:** **Maximum switching voltage:** **Maximum conduction current:**	Potential free contacts 3 NO relays 1 NC relay 70 W (DC) / 220 VA (AC) not-inductive 250 VDC / 250 VAC 1 A, as long as the sum of the current of the 4 relays is not greater than 2 A in the common point (terminal 5)
Serial Communication Port:	1 RS-485 available for the user
Communication Protocols:	RTU Modbus DNP 3.0 Level 1
Analog outputs: **Maximum error:** **Options (selectable) and maximum load:**	Two 0.5% of the end of scale 0...1 mA, 10 kΩ 0...5 mA, 2 kΩ 0...10 mA, 1 kΩ 0...20 mA, 500 Ω 4...20 mA, 500 Ω
Hydrogen measurement **Measurement Range:** **Maximum error:**	0 to 2000 PPM ± 5% of the measurement or ± 20 PPM, whichever is higher
Water saturation measurement **Measurement Range:** **Maximum error:**	0 to 100% ± 2% of water saturation
Temperature Measurement **Measurement Range:** **Maximum error:**	-55 to 200 º C ± 0.5% of the end of scale
Mass Memory: **Recording interval:** **Capacity:**	Non-volatile FIFO (*First in first out*) 1 to 1.440 minutes 60.000 records – 6,8 years with a 60 minute interval

8.3 Appendix C – Ordering Specifications

The Periscope is a universal equipment, with characteristics selected through its programming menus. Power supply is universal (38 to 275 Vdc or 85 to 265 Vac 50/60 Hz).

When ordering this equipment, you need to provide only the following specifications:

- Quantity desired ;
- Oil connection thread: Either 1/2" BSP or 1/2" NPT (BSP to NPT thread adapter is provided);
- Rod length: 250 mm (standard) or 350 mm (optional);
- Optional functions desired:
    - Moisture in Oil measurement.

BRAZIL
Treetech Sistemas Digitais Ltda
Praça Claudino Alves, 141, Centro
CEP 12.940-000 - Atibaia/SP
+ 55 11 2410-1190
comercial@treetech.com.br
www.treetech.com.br